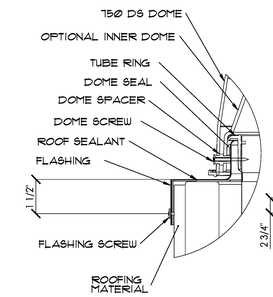

DETAIL "A "

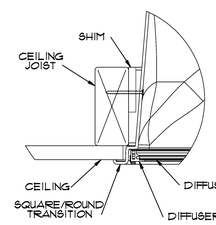

DETAIL "B"

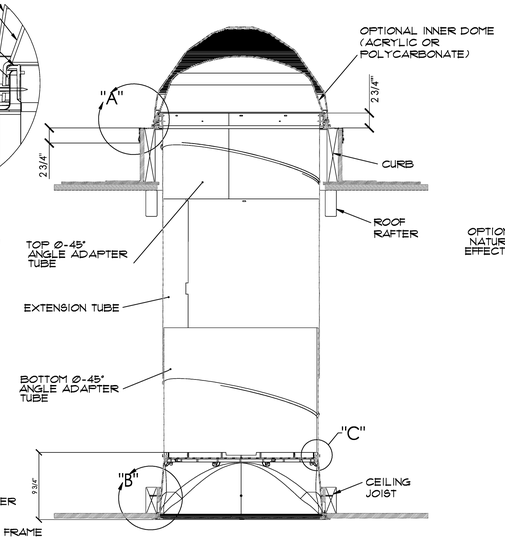

FULL SECTION

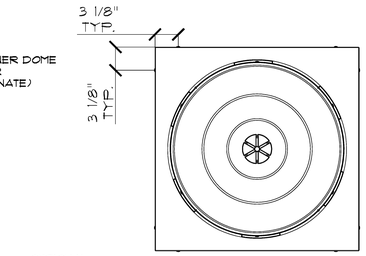

TOP VIEW

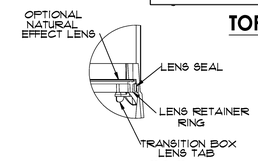

DETAIL "C "

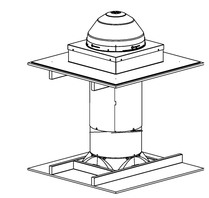

NOTES:

1. STRUCTURAL ELEMENTS (PLYWOOD, RAFTERS, DRYWALL ETC.) BY OTHERS & SHOWN FOR REFERENCE ONLY.
2. ALL TUBE JOINTS & SEAMS TAPED WITH 2" FOIL TAPE (NOT SHOWN).
3. DIMENSIONS IN BRACKETS ARE METRIC UNLESS OTHERWISE SPECIFIED.
4. 6" MIN CLEARANCE SHOULD BE MAINTAINED FROM ALL SOLATUBE COMPONENTS AND OTHER PLENUM COMPONENTS.

22	SOLAR TUBE DUCTING	1"=1'-0"
10	SOLAR TUBE @ BUILT-UP ROOFING	1 1/2"=1'-0"
23	–	
19	–	
15	–	
24	–	-
20	–	
16	–	
12	SOLAR TUBE @ METAL ROOF	1"=1'-0"

1

LICENSED ARCHITECT JAMES M. SHANNON C19098 RENEWAL 05/29/ STATE OF CALIFORNIA

REVISIONS	DATE
1	
2	
3	
4	
5	
6	

P S W C GROUP
ARCHITECTS / PLANNERS
1867 BUSINESS CENTER DR., SUITE 3, SAN BERNARDINO, CA. 92408
909/890-2233 FAX. 909/890-2844

ROOSEVELT II
ELEMENTARY SCHOOL
SAN BERNARDINO CITY UNIFIED SCHOOL DISTRICT
1261 W. 16TH STREET, SAN BERNARDINO, CA.

DETAILS

SCALE: AS NOTED

JOB NO. F9520
DRAWN BY –
DATE 6/7/2011

A-11.8

RE-BID #F09-02 ROOSEVELT II (HENRY) E.S. NEW CONSTRUCTION BID ISSUANCE SET 12/09/11