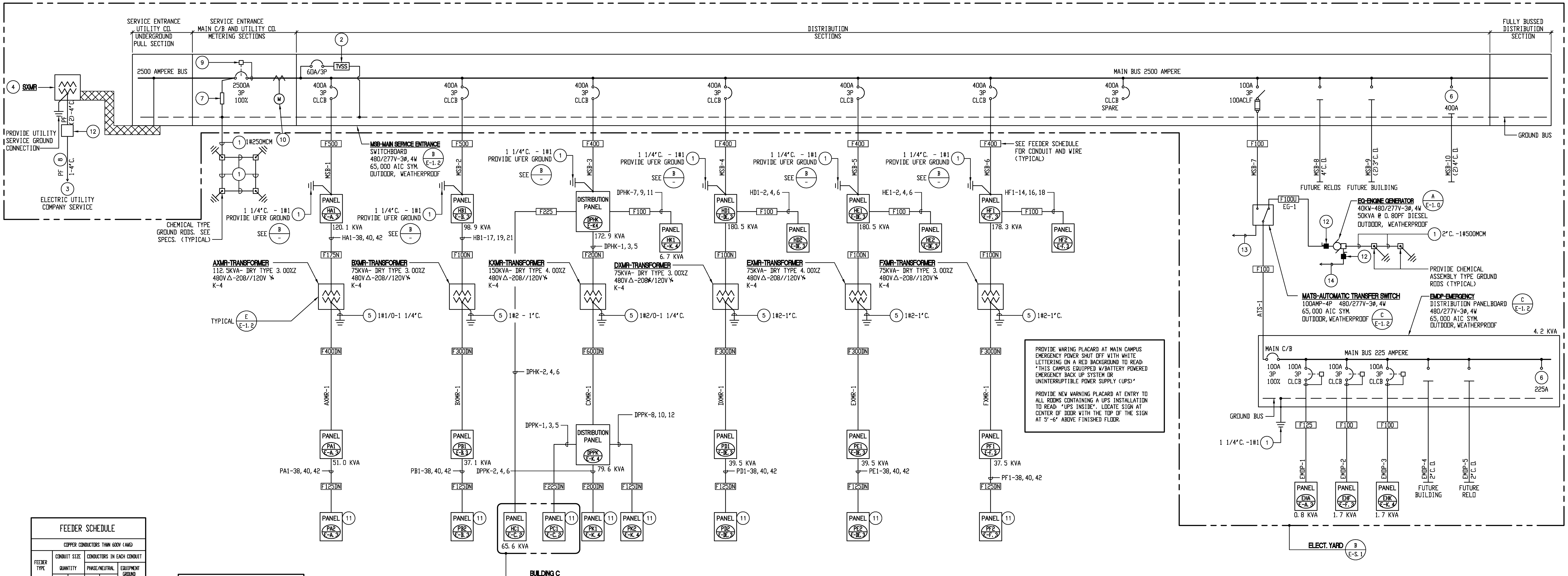

SINGLE LINE DIAGRAM

A

SCALE: N.T.S.

FEEDER SCHEDULE					
COPPER CONDUCTORS THWN 600V (AWG)					
FEEDER TYPE	CONDUIT SIZE QUANTITY: QUAN.	SIZE	CONDUCTORS IN EACH CONDUIT PHASE/NEUTRAL: QUAN.	SIZE	EQUIPMENT GROUND WIRE SIZE
F20	1	3/4"	4	12	12
F30	1	3/4"	4	10	10
F40	1	1"	4	8	10
F50	1	1 1/4"	4	6	10
F60	1	1 1/2"	4	4	10
F70	1	1 1/2"	4	4	8
F80	1	2"	4	2	8
F90	1	2"	4	2	8
F100	1	2"	4	1	8
F110	1	2"	4	1	6
F125	1	2"	4	1/0	6
F150	1	2"	4	1/0	6
F175	1	2"	4	2/0	6
F200	1	2 1/2"	4	3/0	6
F225	1	3"	4	4/0	4
F250	1	3"	4	250MCM	4
F275	1	4"	4	350MCM	4
F300	1	4"	4	350MCM	4
F350	1	4"	4	500MCM	2
F400	2	2 1/2"	4	3/0	2
F500	2	3"	4	250MCM	2
F600	2	4"	4	350MCM	1
F700	2	4"	4	500MCM	1/0
F800	3	4"	4	350MCM	1/0
F900	3	4"	4	350MCM	2/0
F1000	3	4"	4	500MCM	2/0
F1200	4	4"	4	350MCM	3/0
F1600	5	4"	4	500MCM	4/0
F2000	6	4"	4	500MCM	250MCM
F2500	7	4"	4	500MCM	350MCM
F3000	8	4"	4	500MCM	500MCM
F4000	11	4"	4	500MCM	500MCM
F20/N	1	3/4"	3	12	12
F30/N	1	3/4"	3	10	10
F40/N	1	1"	3	8	10
F50/N	1	1"	3	6	10
F60/N	1	1 1/4"	3	4	10
F70/N	1	1 1/4"	3	4	8
F80/N	1	1 1/4"	3	2	8
F90/N	1	1 1/4"	3	2	8
F100/N	1	1 1/2"	3	1	8
F110/N	1	1 1/2"	3	1	6
F125/N	1	2"	3	1/0	6
F150/N	1	2"	3	1/0	6
F175/N	1	2"	3	2/0	6
F200/N	1	2"	3	3/0	6
F225/N	1	2 1/2"	3	4/0	4
F250/N	1	2 1/2"	3	250MCM	4
F275/N	1	3"	3	350MCM	4
F300/N	1	3"	3	350MCM	4
F350/N	1	4"	3	500MCM	2
F400/N	2	2"	3	3/0	2
F500/N	2	2 1/2"	3	250MCM	2
F600/N	2	3"	3	350MCM	1
F700/N	2	4"	3	500MCM	1/0
F800/N	3	3"	3	350MCM	1/0
F350/U	-	-	-	-	-
F400/U	2	3"	4	4/0	2
F500/U	2	4"	4	350MCM	1/0
F600/U	2	4"	4	500MCM	2/0
F700/U	2	4"	4	500MCM	2/0
F800/U	3	4"	4	350MCM	2/0
F900/U	3	4"	4	500MCM	4/0
F1000/U	3	4"	4	500MCM	4/0
F1200/U	4	4"	4	500MCM	250MCM
F1600/U	6	4"	4	500MCM	250MCM
F2000/U	8	4"	4	500MCM	350MCM
F2500/U	9	4"	4	500MCM	500MCM
F3000/U	11	4"	4	500MCM	500MCM
F4000/U	15	4"	4	500MCM	500MCM
F350/NU	-	-	-	-	-
F400/NU	2	3"	3	4/0	2
F500/NU	2	4"	3	350MCM	1/0
F600/NU	2	4"	3	500MCM	1/0
F700/NU	2	4"	3	500MCM	1/0
F800/NU	3	4"	3	350MCM	2/0
F100/DN	1	2"	5	1	8
F125/DN	1	2 1/2"	5	1/0	6
F150/DN	1	2 1/2"	5	1/0	4
F225/DN	1	3"	5	4/0	4
F300/DN	1	4"	5	350MCM	2
F400/DN	2	3"	5	3/0	2
F600/DN	2	4"	5	350MCM	1
F800/DN	3	5"	5	350MCM	1/0
F1200/DN	4	4"	5	350MCM	3/0
F1600/DN	5	5"	5	500MCM	4/0

LOAD SUMMARY
(DEMAND LOAD)

MSB-1	= 120.1 KVA
MSB-2	= 98.9 KVA
MSB-3	= 172.9 KVA
MSB-4	= 180.5 KVA
MSB-5	= 180.5 KVA
MSB-6	= 178.3 KVA
MSB-7	= 4.2 KVA
MSB-8 (FUT)	= (222.0 KVA)
MSB-9 (FUT)	= (167.9 KVA)
TOTAL LOAD	= 1325.3 KVA

OR 1594.8 AMPS @ 277/480V, 3Ø, 4W.

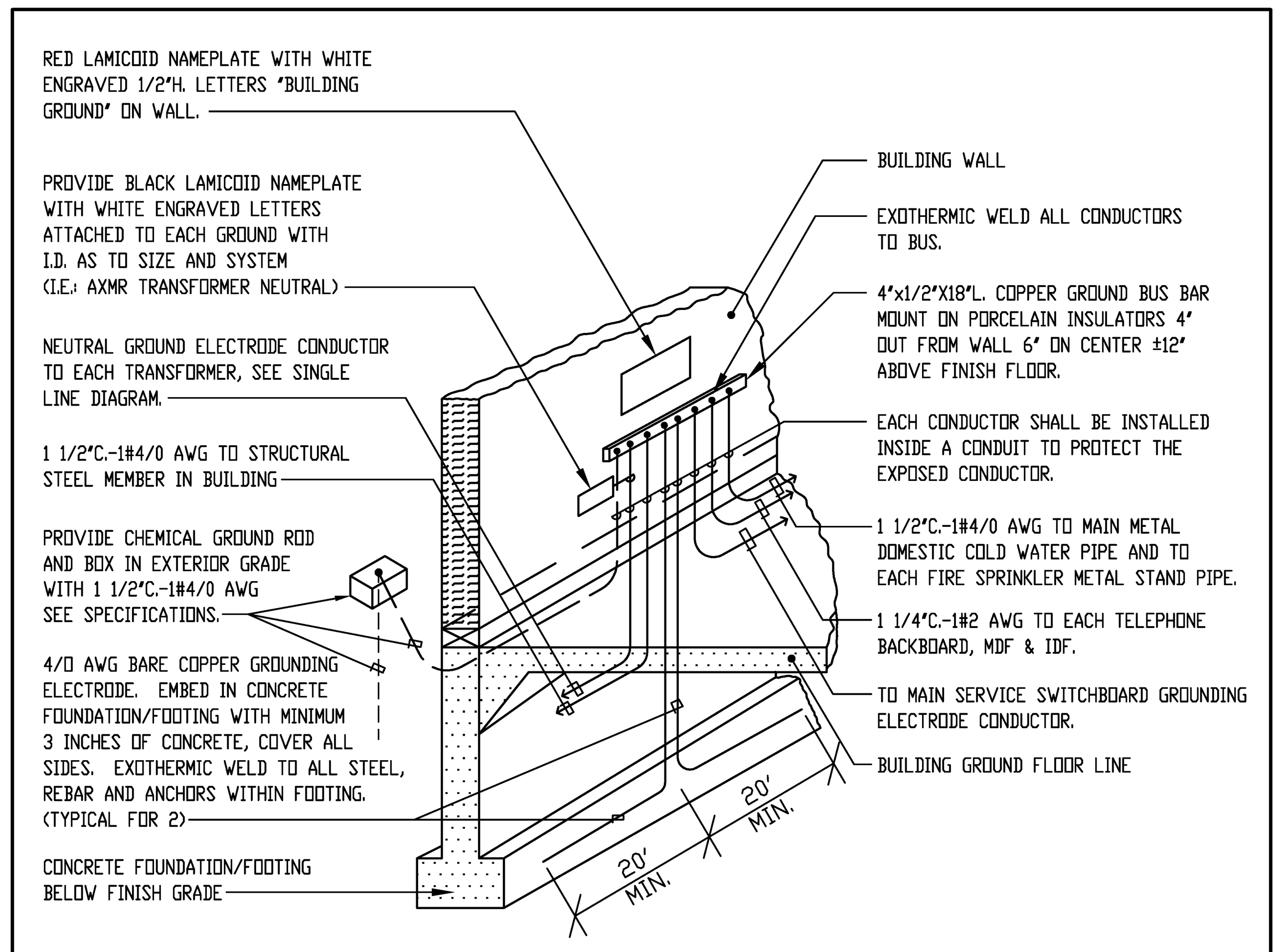

BUILDING ELECTRICAL SERVICE GROUND BUS DETAIL

B

(UFER GROUND) SCALE: N.T.S.

SINGLE LINE DIAGRAM PLAN NOTES:

1. GROUNDING ELECTRODE CONDUCTOR, CONNECT FROM EQUIPMENT GROUND BUS TO BUILDING ELECTRICAL SERVICE GROUND BUS.
2. TRANSIENT VOLTAGE SURGE SUPPRESSOR. INSTALL INSIDE RESPECTIVE EQUIPMENT.
3. TERMINATE AS DIRECTED BY ELECTRIC SERVICE UTILITY COMPANY.
4. ELECTRIC UTILITY COMPANY SERVICE TRANSFORMER PAD, SERVICE CABLE BOX, AND GROUNDING. PROVIDE IN ACCORDANCE WITH UTILITY COMPANY REQUIREMENTS. TRANSFORMER 'SXMR' SHALL BE 10' x 12' SLAB BOX.
5. TRANSFORMER NEUTRAL GROUNDING ELECTRODE CONDUCTOR, CONNECT TO BUILDING STRUCTURAL STEEL AND METAL COLD WATER PIPE LOCATED NEAR THE TRANSFORMER AND CONNECT TO BUILDING ELECTRICAL SERVICE GROUND BUS.
6. PROVIDE SPACE FOR TWO(2) FUTURE FEEDER PROTECTION DEVICES, TO MATCH OTHER FEEDER PROTECTION DEVICES LOCATED IN THE PERSPECTIVE EQUIPMENT. AMPERE CAPACITY OF EACH SPACE AS INDICATED.
7. NEUTRAL TO GROUND REMOVABLE BUS LINK, TYPICAL FOR EACH BUILDING SERVICE ENTRANCE. ONLY ONE LOCATION SHOWN FOR DRAWING CLARITY.
8. PROVIDE UNDERGROUND SERVICE CONDUIT & CONDUCTORS AS REQUIRED BY ELECTRICAL SERVICE UTILITY COMPANY.
9. GROUND FAULT RELAY, GROUND FAULT SENSOR AND MONITOR PANEL TYPICAL.
10. METERING PROVISION SHALL COMPLY WITH ELECTRIC SERVICE UTILITY COMPANY REQUIREMENTS.
11. PROVIDE NEUTRAL BUS SIZED AT 200 PERCENT OF PHASE BUS RATING.
12. PROVIDE CLASSIFIED HAZARDOUS 'EXPLOSION PROOF' CONDUIT SEALS ON EACH CONDUIT.
13. PROVIDE CONDUIT AND WIRE CONNECTIONS FOR ATS CONTROLS, AND INTERLOCKS: 1"C. - 6#14 TO ENGINE GENERATOR ANNUNCIATOR PANEL.
14. PROVIDE CONDUIT & WIRE CONNECTIONS FOR ENGINE GENERATOR CONTROLS, AUXILIARY AND CONTROL POWER:
    a. 1"C.-5#10 TO RESPECTIVE AUTOMATIC TRANSFER SWITCH FOR ENGINE 'STOP/START' CONTROL AND AUTOMATIC ENGINE EXERCISER CONTROL.
    b. 1 1/2"C.-16#14 TO ENGINE GENERATOR ANNUNCIATOR PANEL.
    c. 1 1/2"C.-4#2 & 1#6 GROUND FOR ENGINE GENERATOR CONTROL POWER, ENGINE BATTERY CHARGER AND ENGINE BLOCK HEATER POWER. CONNECT TO PANEL ELD.
    d. 1"C-3#10 FOR ENGINE GENERATOR DUPLEX CONVENIENCE 120 VOLT, 60HZ MAINTENANCE OUTLETS LOCATED AT ENGINE GENERATOR. CONNECT TO PANEL ELD.
15. PROVIDE 4" CONDUIT FROM SWITCHBOARD TO THE PULLBOX OUTSIDE THE ELECTRICAL YARD FOR EACH SPARE BREAKER
16. PROVIDE CABLE TRENCH WITH DIAMOND PLATE COVER IN ACCORDANCE WITH SERVING POWER CO. REQUIREMENTS.

LICENSED ARCHITECT JAMES M. STINSON C19098 RENEWAL 02/28/ STATE OF CALIFORNIA

REGISTERED PROFESSIONAL ENGINEER STEPHEN R. ZAJICEK No. E 10372 Exp. 09-30-12 ELECTRICAL STATE OF CALIFORNIA

FBA Engineering
Consulting Electrical Engineers
3420 Irvine Avenue Suite 200
Newport Beach, California 92660-3199
TEL: 949 852 9995 FAX: 949 852 1657
EMAIL: fba@fbaengineering.net
FBA # 270.032

DATE | REVISIONS

P S W C GROUP
ARCHITECTS / PLANNERS
1887 BUSINESS CENTER DR., SUITE 3, SAN BERNARDINO, CA. 92408
909/890-2233 FAX. 909/890-2644

ROOSEVELT II
ELEMENTARY SCHOOL
SAN BERNARDINO CITY UNIFIED SCHOOL DISTRICT
1261 W. 16TH STREET, SAN BEERNARDINO, CA.

SINGLE LINE DIAGRAM, NOTES AND DETAILS

JOB NO. P520
DRAWN BY FBA
DATE 12/8/2011

E-1.1

RE-BID #F09-02 ROOSEVELT II (HENRY) E.S. NEW CONSTRUCTION BID ISSUANCE SET 12/09/11

Filename: I:\270\032\E-1.1.dwg (jmusick) Dimscale: 1=1 Date: DEC 07, 2011 Time: 1:18 PM Xrefs: TITLEBLOCK