SEE SHEET A-7.1
FOR LEGEND NOTES

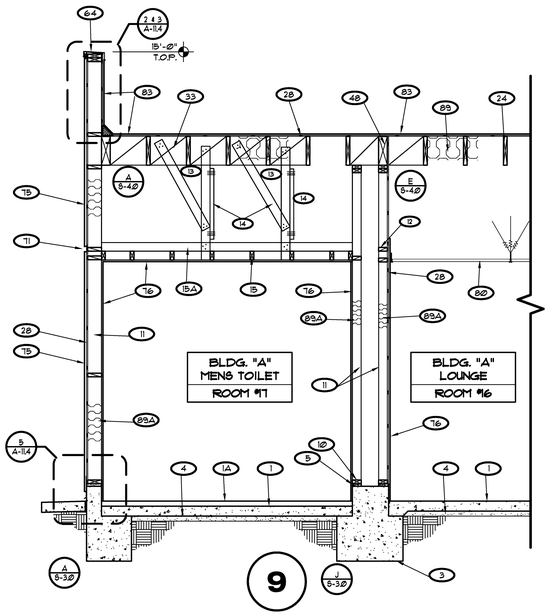

9

BLDG. SECT. C/A-A3
BUILDING "A"

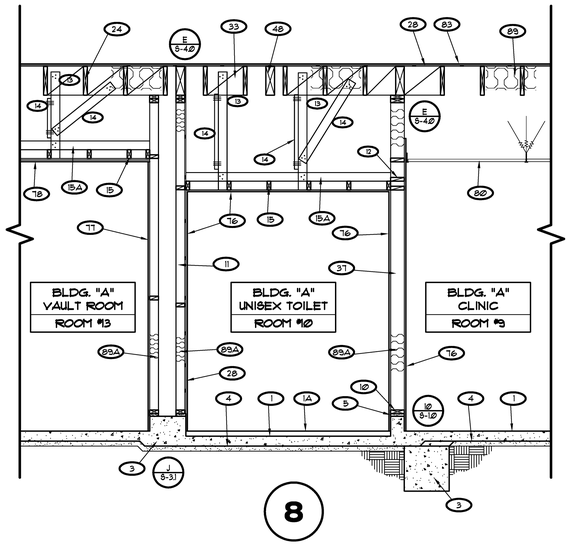

8

BLDG. SECT. C/A-A3
BUILDING "A"

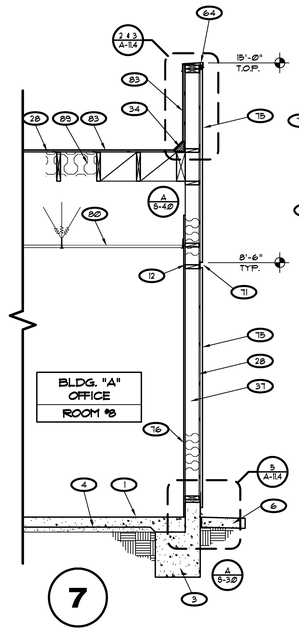

7

BLDG. SECT. C/A-A3
BUILDING "A"

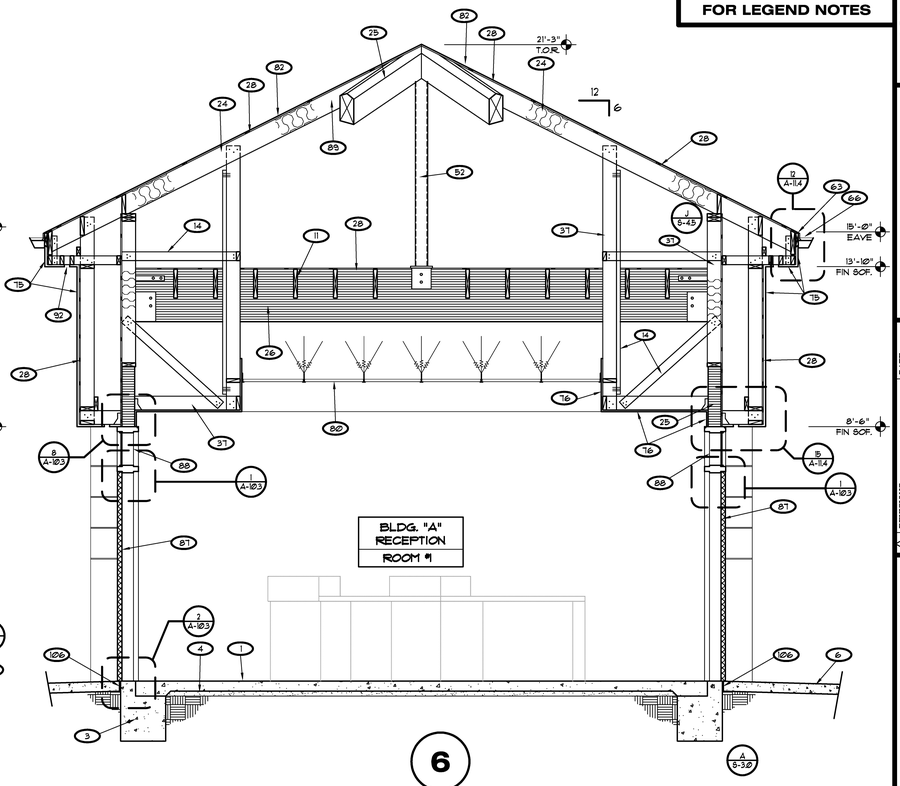

6

BLDG. SECT. D/A-A3
BUILDING "A"

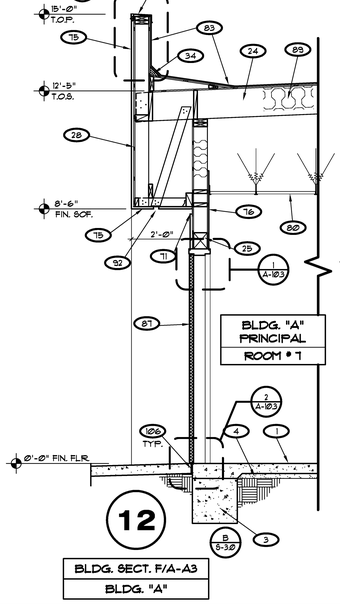

12

BLDG. SECT. F/A-A3
BLDG. "A"

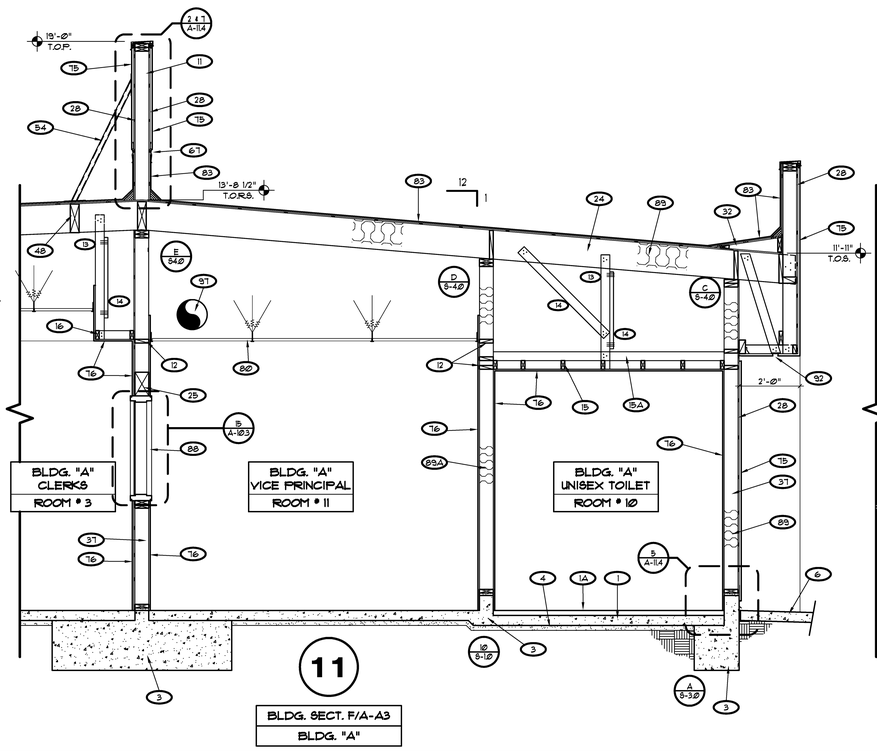

11

BLDG. SECT. F/A-A3
BLDG. "A"

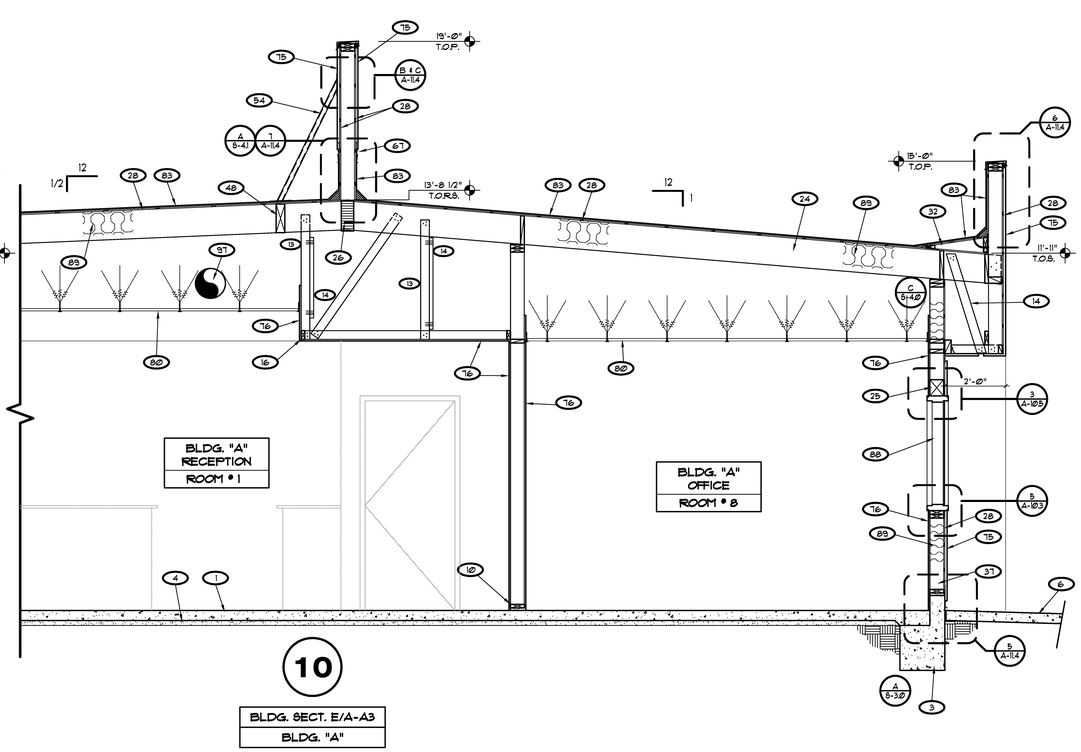

10

BLDG. SECT. E/A-A3
BLDG. "A"

LICENSED ARCHITECT
JAMES M. SPENCER
C19096
RENEWAL 02/28/
STATE OF CALIFORNIA

DATE	REVISIONS

P S W C GROUP
ARCHITECTS / PLANNERS
1887 BUSINESS CENTER DR., SUITE 3, SAN BERNARDINO, CA. 92408
909/890-2223 FAX. 909/890-2844

ROOSEVELT II
ELEMENTARY SCHOOL
SAN BERNARDINO CITY UNIFIED SCHOOL DISTRICT
1261 W. 18TH STREET, SAN BERNARDINO, CA.

WALL SECTIONS
SCALE: 1/8" = 1'-0"

JOB NO. P580
DRAWN BY
DATE 6/7/2011

A-7.2

RE-BID #F09-02 ROOSEVELT II (HENRY) E.S. NEW CONSTRUCTION BID ISSUANCE SET 12/09/11