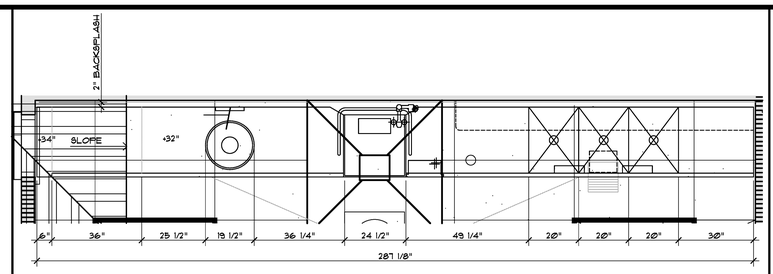

ALL DIMENSIONS ARE TO WALL FINISH

13 S.S. KITCHEN SERVICE COUNTER 1/2"=1'-0"

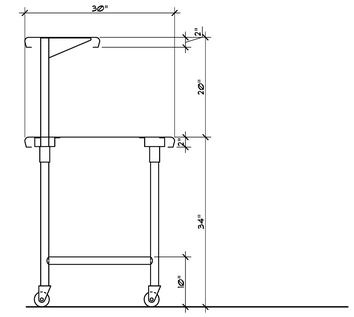

5 COUNTER SECTION 1 1/2"=1'-0"

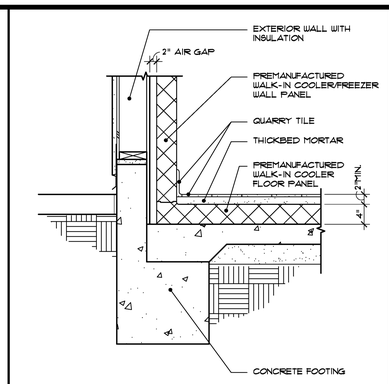

1 WALK-IN COOLER FOOTING 1 1/2"=1'-0"

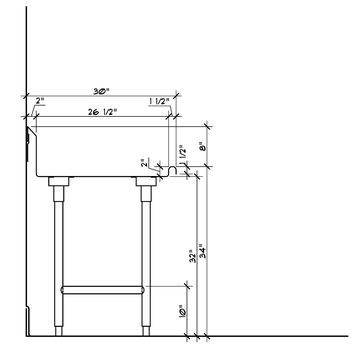

6 COUNTER SECTION 3"=1'-0"

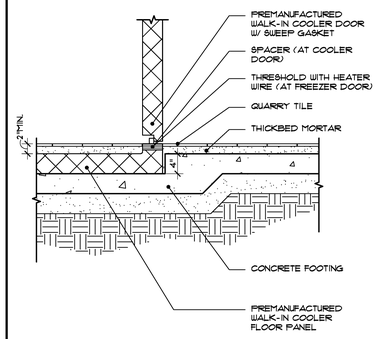

2 WALK-IN COOLER THRESHOLD 1 1/2"=1'-0"

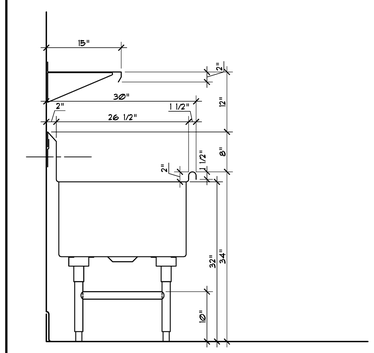

7 COUNTER SECTION 3"=1'-0"

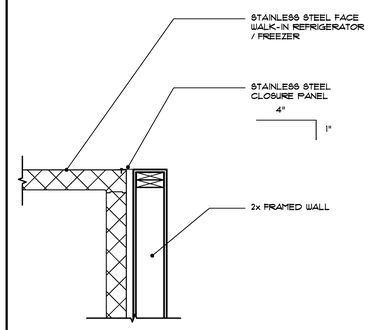

3 S.S. CLOSURE PANEL 1 1/2"=1'-0"

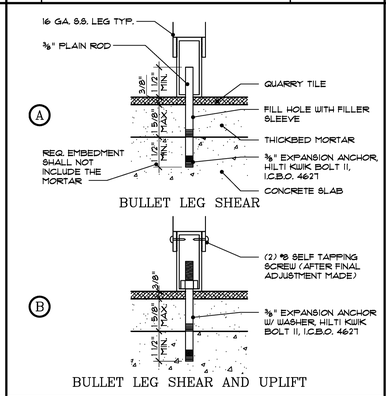

8 BULLET LEG CONNECTION 6"=1'-0"

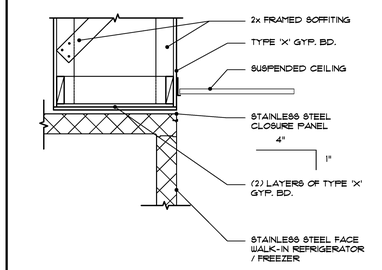

4 S.S. CLOSURE PANEL 1 1/2"=1'-0"

21 17 13 5 1

22 18 14 10 6 2

23 19 15 11 7 3

24 20 16 12 8 4

LICENSED ARCHITECT JAMES M. STINSON C19096 RENEWAL 02/28/ STATE OF CALIFORNIA

DATE | REVISIONS | 1

P S W C GROUP
ARCHITECTS / PLANNERS
1687 BUSINESS CENTER DR., SUITE 3, SAN BERNARDINO, CA. 92408
909/890-2233 FAX. 909/890-2844

ROOSEVELT II
ELEMENTARY SCHOOL
SAN BERNARDINO CITY UNIFIED SCHOOL DISTRICT
1261 W. 16TH STREET, SAN BERNARDINO, CA.

DETAILS

SCALE: 1/2" = 1'-0"

JOB NO. PS20 | DRAWN BY | DATE 5/7/2011

A-K2.3

RE-BID #F09-02 ROOSEVELT II (HENRY) E.S. NEW CONSTRUCTION BID ISSUANCE SET 12/09/11