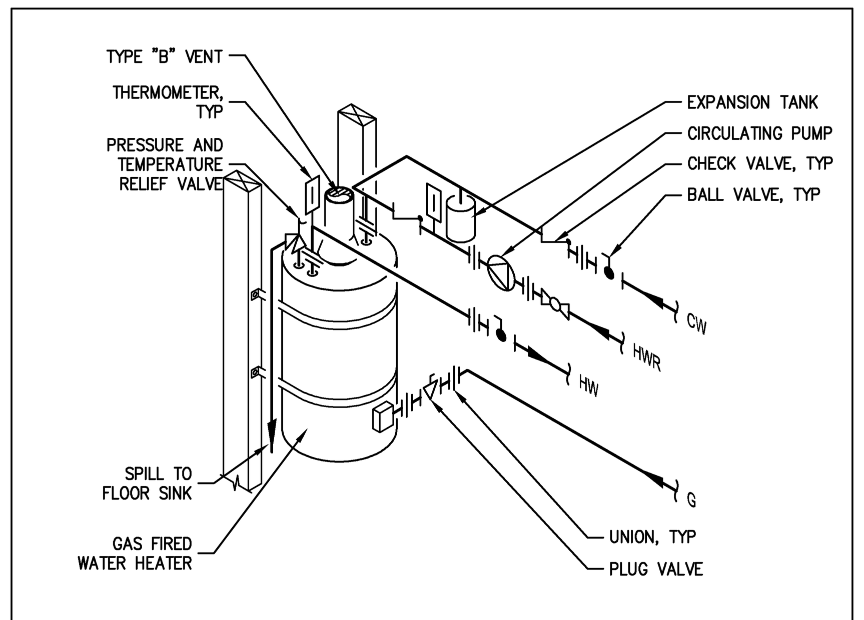


## GAS FIRED WATER HEATER W/ RECIRCULATION (3)

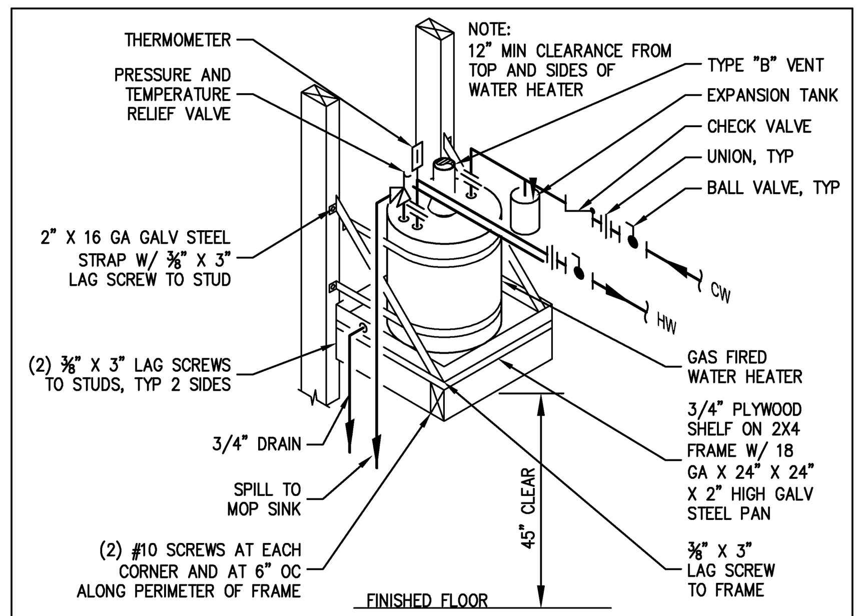


## GAS FIRED WATER HEATER (3)

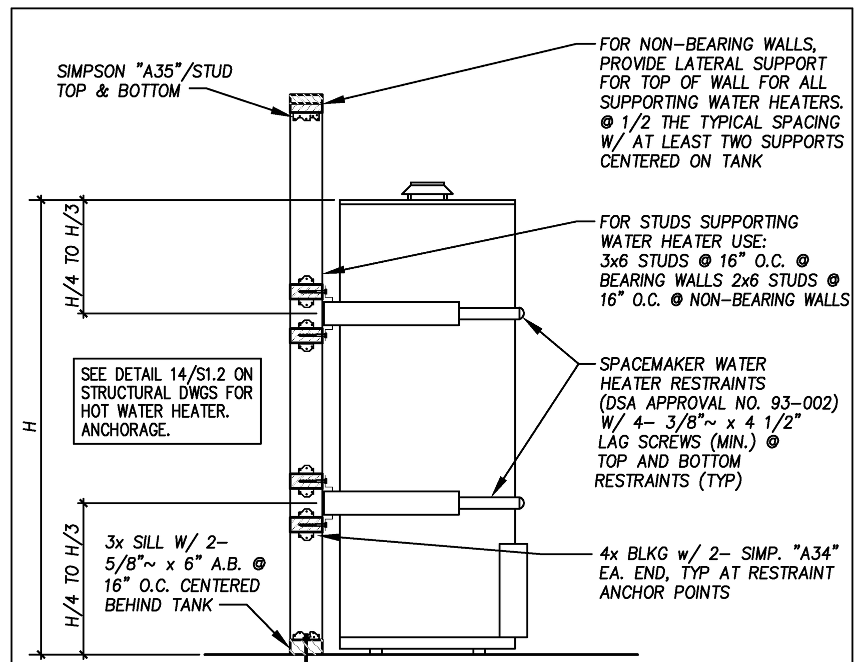


## WATER HEATER ANCHORAGE (4)

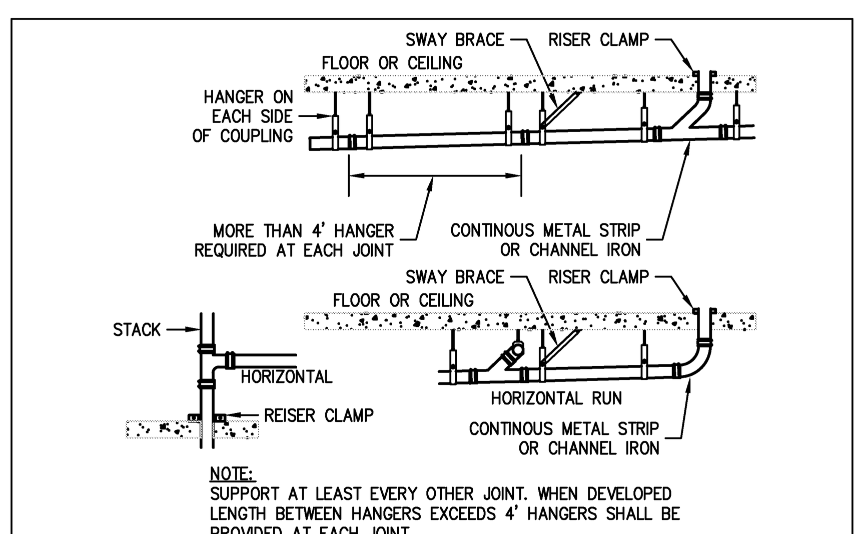


NOTE:
SUPPORT AT LEAST EVERY OTHER JOINT. WHEN DEVELOPED LENGTH BETWEEN HANGERS EXCEEDS 4' HANGERS SHALL BE PROVIDED AT EACH JOINT.

## LOCATION FOR HANGERS FOR CAST IRON HUBLESS SOIL PIPE (5)

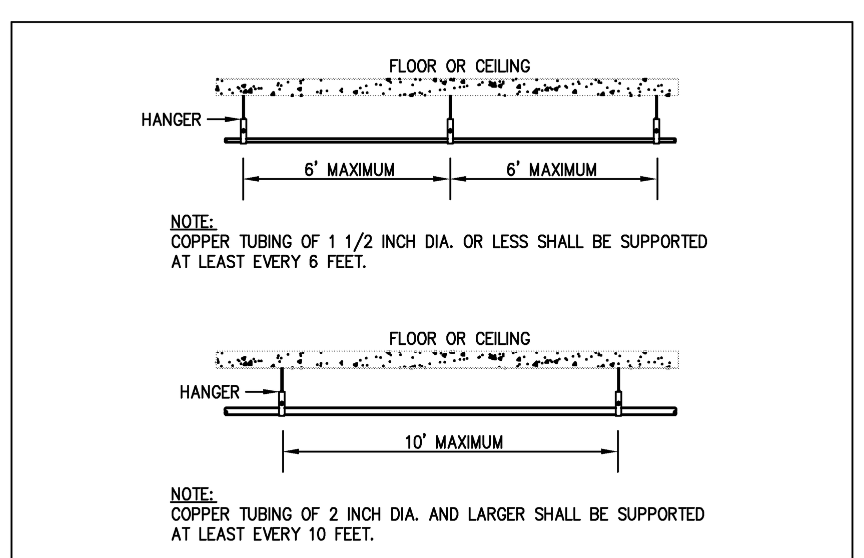


NOTE:
COPPER TUBING OF 1 1/2 INCH DIA. OR LESS SHALL BE SUPPORTED AT LEAST EVERY 6 FEET.



NOTE:
COPPER TUBING OF 2 INCH DIA. AND LARGER SHALL BE SUPPORTED AT LEAST EVERY 10 FEET.

## HANGER LOCATIONS FOR COPPER TUBING (6)

## GAS FIRED WATER HEATER SCHEDULE

| NO. | TYPE | HGT (IN) | DIA (IN) | STOR (GAL) | INPUT (MBTUH) | OUTPUT (MBTUH) | RECOVERY @ (GPH) | (°F) | DELIV (°F) | WEIGHT LBS | NOTES |
|---|---|---|---|---|---|---|---|---|---|---|---|
| GWH-1 | STORAGE | 60 1/4 | 26 | 75 | 80 | – | 55 | 140 | 130 | 294 | "BRADFORD WHITE" # 75T-80-3N |
| GWH-2 | STORAGE | 46 1/2 | 17 3/4 | 30 | 34 | – | 31 | 100 | 110 | 438 | "RHEEM" # 30-34N |
| GWH-3 | – | – | – | – | – | – | – | – | – | – | NOT USED |
| GWH-4 | STORAGE | 71 | 30 1/4 | 80 | 399 | – | 388 | 100 | 140 | 1300 | "LOCHINVAR" # CNR400-080 |

## TANK SCHEDULE

| NO. | TYPE | HGT (IN) | DIA (IN) | STOR (GAL) | ORIENTATION | NOTES |
|---|---|---|---|---|---|---|
| ET-1 | EXPANSION | 11 | 15 | 4.4 | IN-LINE | "AMTROL" #ST-12 |
| ET-2 | EXPANSION | 12 5/8 | 8 | 2.0 | IN-LINE | "AMTROL" #ST-5 |
| ET-3 | – | – | – | – | – | NOT USED |
| ET-4 | EXPANSION | 11 | 15 | 4.4 | IN-LINE | "AMTROL" #ST-12 |

## CIRCULATING PUMP SCHEDULE

| NO. | TYPE | LENGTH (IN) | HEIGHT (IN) | ELECTRICAL VOLT | PH | HP | SPEED (RPM) | DESIGN POINT (GPH) | (FT HD) | WEIGHT (LBS) | NOTES |
|---|---|---|---|---|---|---|---|---|---|---|---|
| CP-1 | IN LINE CIRC | 5 1/8 | 3 1/4" | 120 | 1 | 1/20 | 2800 | 1.2 | 0.5 | 10 | SWEAT CONN. |
| CP-2 | IN LINE CIRC | 5 1/8 | 3 1/4" | 120 | 1 | 1/20 | 2800 | 1.2 | 0.5 | 10 | SWEAT CONN. |
| CP-3 | – | – | – | – | – | – | – | – | – | – | NOT USED |
| CP-4 | IN LINE CIRC | 5 1/8 | 3 1/4" | 120 | 1 | 1/20 | 2800 | 1.2 | 0.5 | 10 | SWEAT CONN. |

## CONDENSATE PUMP SCHEDULE

| NO. | TYPE | LENGTH (IN) | HEIGHT (IN) | ELECTRICAL VOLT | PH | HP | SPEED (RPM) | DESIGN POINT (GPH) | (FT HD) | WEIGHT (LBS) | NOTES |
|---|---|---|---|---|---|---|---|---|---|---|---|
| CDP-1 | COND PUMP | 5 1/8 | 3 1/4" | 115 | 1 | 1/18 | – | – | 20 | 10 | "LITTLE GIANT" No. VCL-14 |
| CDP-2 | COND PUMP | 5 1/8 | 3 1/4" | 115 | 1 | 1/18 | – | – | 20 | 10 | "LITTLE GIANT" No. VCL-14 |
| CDP-3 | COND PUMP | 5 1/8 | 3 1/4" | 115 | 1 | 1/18 | – | – | 20 | 10 | "LITTLE GIANT" No. VCL-14 |
| CDP-4 | COND PUMP | 5 1/8 | 3 1/4" | 115 | 1 | 1/18 | – | – | 20 | 10 | "LITTLE GIANT" No. VCL-14 |
| CDP-5 | COND PUMP | 5 1/8 | 3 1/4" | 115 | 1 | 1/18 | – | – | 20 | 10 | "LITTLE GIANT" No. VCL-14 |
| CDP-6 | – | – | – | – | – | – | – | – | – | – | – |
| CDP-7 | COND PUMP | 5 1/8 | 3 1/4" | 115 | 1 | 1/18 | – | – | 20 | 10 | "LITTLE GIANT" No. VCL-14 |

## GREASE INTERCEPTOR SCHEDULE

| NO. | TYPE | HGT (IN) | LENGTH (IN) | STOR (GAL) | NOTES |
|---|---|---|---|---|---|
| GI-1 | GREASE INTERCEPTOR | 72 | 97 | 750 | JENSEN PRECAST #JP750G |

## FIXTURE SCHEDULE

| NO. | TYPE | ROUGH-IN SAN | V | CW | HW | FU SAN | CW | NOTES |
|---|---|---|---|---|---|---|---|---|
| WC-1 | WATER CLOSET | 4" | 2" | 1 1/2" | – | 4 | 5 | A.S. "AFWALL" NO. 2257.103, ELONGATED 1.6 GPF WALL HUNG WITH "OLSONITE" No. CC-95 SEAT AND "SLOAN" ROYAL III MANUAL FLUSH VALVE. |
| WC-2 | WATER CLOSET | 4" | 2" | 1 1/2" | – | 4 | 5 | ♿ A.S. "AFWALL" No.2294.011, ELONGATED 1.6 GPF WALL HUNG "OLSONITE" No. CC-95 SEAT AND "SLOAN" ROYAL III MANUAL FLUSH VALVE. |
| UR-1 | URINAL | 2" | 2" | 3/4" | – | 2 | 4 | A.S. "WASHBROOK" No. 6501.010 WITH "SLOAN" No. 180-1.0 MANUAL FLUSH VALVE, 1 GPF. |
| UR-2 | URINAL | 2" | 2" | 3/4" | – | 2 | 4 | ♿ A.S. "WASHBROOK" No. 6501.010 WITH "SLOAN" No. 180-1.0 MANUAL FLUSH VALVE, 1 GPF. |
| LV-1 | LAVATORY | 2" | 2" | 1/2" | – | 1 | 1 | ♿ A.S. "LUCERNE" NO. 0355.012, "CHICAGO FAUCETS" No. 857-E12-665PSHABCP, WITH "ADA" APPROVED INSULATION ON BOTH SUPPLIES & TRAP, TRUEBRO "LAVGUARD" 2E-Z, CHINA WHITE |
| LV-2 | LAVATORY | 2" | 2" | 1/2" | 1/2" | 1 | 1 | ♿ A.S. "LUCERNE" NO. 0355.012, "CHICAGO FAUCETS" No. 802-V317XKABCP, WITH "ADA" APPROVED INSULATION ON BOTH SUPPLIES & TRAP, TRUEBRO "LAVGUARD" 2E-Z, CHINA WHITE |
| SK-1 | SINK | 2" | 1 1/2" | 3/4" | 3/4" | 3 | 2 | ♿ "ELKAY" 18 GA. SS SINK NO. PSDKAD2517 6½" DEEP BOWL, WITH "CHICAGO FAUCETS" NO. 350-ABCP SINGLE HANDLE GOOSENECK FAUCET, & "HAWS" NO. 5017LF BUBBLER |
| SK-2 | SINK | 2" | 1 1/2" | 3/4" | 3/4" | 3 | 2 | ♿ ""ELKAY" 18 GA. SS SINK NO. LRAD2219, 6½" DEEP BOWL WITH "ELKAY" NO. LK35 DRAIN & "CHICAGO FAUCETS" NO.1888-ABCP FAUCET. |
| SK-3 | SINK | 2" | 1 1/2" | 3/4" | 3/4" | 6 | 6 | ♿ "ELKAY" 14 GA. SS SINK No. MN13835D, "ELKAY" No. LK60 WITH (3) "ELKAY" No.LK35 DRAIN & (2) "CHICAGO FAUCETS" No. 445-ABCP FAUCET. |
| MS-1 | MOP SINK | 3" | 2" | 3/4" | 3/4" | 3 | 2 | "A.S." FLORWELL No. 7741.000 WITH "CHICAGO FAUCETS" No. 540-LD897SWXFCP. |
| DF-1 | DRINKING FOUNTAIN | 2" | 1 1/2" | 1/2" | – | – | .5 | ♿ HAWS "HiLo" No. 1119.14 WALL MOUNTED DRINKING FOUNTAIN, 14 GAUGE TYPE 304 STAINLESS STEEL. |
| DF-2 | DRINKING FOUNTAIN | 2" | 1 1/2" | 1/2" | – | – | .5 | ♿ HAWS "HiLo" No. 1085 WALL MOUNTED DRINKING FOUNTAIN, WHITE POLYMARBLE BARRIER-FREE DRINKING FOUNTAIN. |
| HB-1 | HOSE BIB | – | – | 3/4" | – | – | 2.5 | WOODFORD #Y26 HOSE BIBB WITH VACUUM BREAKER. |
| WH-1 | HOSE BIB | – | – | 3/4" | – | – | 2.5 | WOODFORD #B65 WALL HYDRANT WITH VACUUM BREAKER. |
| GD-1 | GARBAGE DISPOSER | – | – | – | – | – | – | "WASTE KING" MODEL No. 750, ¾ HP. |
| TP-1 | TRAP PRIMER | – | – | 1/2" | – | – | – | MIFAB NO. MI-701 FLUSH VALVE TRAP SEAL PRIMER |
| SA-1 | SHOCK ABSORBER | – | – | – | – | – | – | WATER HAMMER ARRESTORS: SHALL BE ALL STAINLESS STEEL CONSTRUCTION, BELOW TYPE, P.D.I. APPROVED AND CERTIFIED SIZING AND PLACEMENT CONFORMING TO PLUMBING AND DRAINAGE INSTITUTE STANDARD PDI-WH 201 LATEST EDITION AND AS MANUFACTURED BY ZURN J.R. SMITH OR PPP, INC. |

## DRAIN SCHEDULE

| NO. | TYPE | ROUGH-IN SAN/SD | V | TRAP PRIMER | BODY DEPTH | FINISH | STRAINER/GRATE SIZE | FINISH | FU SAN | NOTES |
|---|---|---|---|---|---|---|---|---|---|---|
| FD-1 | FLOOR DRAIN | 2" | 2" | 1/2" | – | C.I. | 5"ø | N.B. | 2 | JR SMITH #2005-P050 DRAIN WITH TRAP PRIMER CONNECTION. |
| FS-1 | FLOOR SINK | 2" | 2" | – | – | A.R. | 12"X12" | A.R. | – | JR SMITH #3420C FLOOR SINK |
| FS-2 | FLOOR SINK | 2" | 2" | – | – | A.R. | 12"X12" | A.R. | – | JR SMITH #3430C-12 FLOOR SINK W/ 1/2 GRATE |
| FS-3 | FLOOR SINK | 2" | 2" | – | – | A.R. | 12"X12" | A.R. | – | JR SMITH #3430C-13 FLOOR SINK W/ 3/4 GRATE |
| OD-1 | OVERFLOW DRAIN | AS NOTED | – | – | – | C.I. | 14"ø | C.I. | – | JR SMITH #1340C03-R-WD-CID DRAIN, 2" WATER DAM, SUMP RECEIVER AND UNDERDECK CLAMP, EXTENSION AS REQUIRED |
| RD-1 | ROOF DRAIN | AS NOTED | – | – | – | C.I. | 14"ø | C.I. | – | JR SMITH #1340C03-R-CID DRAIN, SUMP RECEIVER AND UNDERDECK CLAMP, EXTENSIONS AS REQUIRED |
| RR-1 | ROOF RECEPTOR | 3" | – | – | – | C.I. | 5"ø | C.I. | – | JR SMITH #3970 ROOF RECEPTOR DRAIN WITH UNDERDECK CLAMP. |

## GAS PRESSURE REGULATOR SCHEDULE

| NO. | BLDG. | PRESSURE IN(PSI) | OUT(IN) | CAPACITY (CFH) | BODY (IN) | ORIFICE (IN) | NOTES |
|---|---|---|---|---|---|---|---|
| GPR-1 | A | 5 | 7 | 320 | 1 1/2" | 1/4" | "FISHER # S201 |
| GPR-2 | B | 5 | 7 | 306 | 1 1/2" | 1/4" | "FISHER # S201 |
| GPR-3 | C | 5 | 7 | 240 | 1 1/2" | 1/4" | "FISHER # S201 |
| GPR-4 | D | 5 | 7 | 616 | 1 1/2" | 1/4" | "FISHER # S201 |
| GPR-5 | E | 5 | 7 | 616 | 1 1/2" | 1/4" | "FISHER # S201 |
| GPR-6 | F | 5 | 7 | 696 | 1 1/2" | 1/4" | "FISHER # S201 |
| GPR-7 | – | – | – | – | – | – | NOT USED |
| GPR-8 | K | 5 | 7 | 651 | 1 1/2" | 1/4" | "FISHER # S201 |

## UNDERGROUND FIRE SERVICE PIPING SPECIFICATIONS

| MATERIAL | SPECIFICATION |
|---|---|
| PIPING | PVC - AWWA C900, CLASS 150 - DR18, GASKETED JOINT ASSEMBLY - ASTM D 3139, PW PIPE OR EQUAL |
| FITTINGS | DI OR CI, BOLTED FLANGE FITTINGS - ANSI/AWWA C110/A21.10, ASPHALTIC COATED, STAR OR EQUAL |
| VALVES, BFG | IRON BODY, FLANGED, 175 PSI, INDICATOR POST PATERN, NON RISING STEM, STOCKHAM #G-632 OR EQUAL |
| DDCV | EPOXY COATED CI BODY, REPLACEABLE BRONZE SEATS, SS TRIM, BRONZE METER, WATTS #709DCDA OR EQUAL |
| HYD | 3 WAY W/ 2 HOSE NOZZLES AND 1 PUMPER NOZZLE, FLANGE SHOE, MUELLER #A-442 OR EQUAL |

## GENERAL NOTES

1. INSTALL ALL WORK IN ACCORDANCE WITH THE 2010 CALIFORNIA PLUMBING CODE AND AUTHORITIES HAVING JURISDICTION.
2. PROVIDE ALL NEW MATERIALS AND WORK UNLESS OTHERWISE NOTED.
3. VERIFY ALL EXISTING UTILITIES INCLUDING SIZE, LOCATION, INVERT, PRESSURE AND AVAILABILITY PRIOR TO THE START OF WORK..
4. DRAWINGS INDICATE THE FINISHED REQUIREMENTS OF THE PLUMBING SYSTEMS AND ARE SPECIFIC WHEREVER POSSIBLE; INSTALL THE WORK AS INDICATED. WHERE NECESSARY, THE WORK IS SHOWN DIAGRAMATICALLY; CONFORM TO THE DESIGN INTENT.
5. REFER TO ARCHITECTURAL DRAWINGS FOR EXACT LOCATIONS OF PLUMBING FIXTURES.
6. COORDINATE LOCATIONS, SIZES, AND ELEVATIONS OF ALL SLEEVES THROUGH STRUCTURE AND PARTITIONS WITH STRUCTURAL AND ARCHITECTURAL DRAWINGS. PROVIDE FIRESTOPPING ASSEMBLIES IN CONFORMANCE WITH UL BUILDING MATERIALS / FIRE RESISTIVE DIRECTORY WHERE REQUIRED.
7. COORDINATE LOCATIONS OF VALVES, PIPING AND PLUMBING EQUIPMENT WITH ARCHITECTURAL DRAWINGS.
8. COORDINATE THE INSTALLATION OF THIS WORK WITH ALL OTHER TRADES MAKING MINOR ADJUSTMENTS AS REQUIRED TO AVOID CONFLICTS.
9. PROVIDE SUPPORTS AND SEISMIC RESTRAINTS FOR ALL PIPING AND EQUIPMENT IN ACCORDANCE WITH SEISMIC RESTRAINT MANUAL (GUIDELINES FOR MECHANICAL SYSTEMS) SECOND EDITION, FEBRUARY 1998 AND ADDENDUM NO. 1, SEPTEMBER 2000. PUBLISHED BY SHEET METAL AND AIR CONDITIONING CONTRACTORS' NATIONAL ASSOCIATION, INC. (SMACNA)
10. OBTAIN AND PAY FOR ALL PERMITS, LICENSES AND FEES REQUIRED FOR THE INSTALLATION OF THE PLUMBING WORK.
11. PROVIDE WATER CLOSETS WHICH USE NO MORE THAN 1.6 GPF AND URINALS WHICH USE NO MORE THAN 1.0 GPF. PROVIDE LAVATORIES LIMITED TO 0.5 GPM, AND SINKS LIMITED TO 2.0 GPM AND SHOWER HEADS LIMITED TO 2.5 GPM THROUGH APPROVED FLOW RESTRICTORS.
12. INSULATE ALL HOT AND COLD WATER PIPING. DELIVER HOT WATER TO PUBLIC LAVATORIES AT 110° F.
13. PROVIDE HOSE BIBS WITH APPROVED VACUUM BREAKERS.
14. PROVIDE SHOCK ABSORBERS ON ALL HOT AND COLD WATER PIPING SERVING FIXTURES OR EQUIPMENT WITH QUICK CLOSING VALVES.
15. PROVIDE TRAP PRIMERS ON ALL FLOOR DRAINS AND FLOOR SINKS WHICH DO NOT RECEIVE A CONTINUOUS DISCHARGE OF WASTE WATER.
16. PROVIDE ACCESS PANELS FOR ALL VALVES AND APPURTENANCES INSTALLED WITHIN OR BEHIND WALLS AND NON-REMOVABLE CEILINGS.
17. AN 8 1/2" X 11" SPECIFICATION IS A PART OF THESE CONSTRUCTION DOCUMENTS.
18. OBTAIN AND PAY FOR ALL PERMITS, LICENSES AND FEES.

## FIRE PROTECTION NOTES

1. DESIGN AND INSTALL A COMPLETE WET AUTOMATIC FIRE SPRINKLER SYSTEM WITH COVERAGE FOR ALL AREAS.
2. ALL WORK SHALL BE IN ACCORDANCE WITH THE 1999 NFPA 13, WITH CALIFORNIA AMENDMENTS STANDARD FOR THE INSTALLATION OF SPRINKLER SYSTEMS AND AUTHORITIES HAVING JURISDICTION.
3. ALL MATERIALS AND WORK ARE NEW UNLESS NOTED OTHERWISE.
4. VERIFY ALL EXISTING UTILITIES INCLUDING SIZE, LOCATION, INVERT, PRESSURE AND AVAILABILITY PRIOR TO THE START OF WORK..
5. COORDINATE SPRINKLER PIPING WITH DUCTS, PIPING, CABLE TRAYS, CONDUITS, OTHER CEILING ACCESSORIES AND EXISTING CONDITIONS. COORDINATE SPRINKLER HEAD LAYOUT WITH REFLECTED CEILING PLANS, GRILLES, AND LIGHT FIXTURES. LOCATE SPRINKLER HEADS SYMMETRICALLY AND IN THE CENTER OF CEILING TILES.
6. PRIOR TO COMMENCING WORK, SUBMIT AND OBTAIN APPROVALS FOR PIPING DRAWINGS, HEAD LAYOUTS, HYDRAULIC CALCULATIONS AND MATERIALS FROM THE ARCHITECT AND ALL AUTHORITIES HAVING JURISDICTION INCLUDING THE LOCAL FIRE MARSHALL AND THE OWNER'S INSURANCE UNDERWRITER.
7. CONCEAL PIPING WHEREVER POSSIBLE. PIPING SHALL NOT PENETRATE VERTICAL FACES OF SOFFITS OR OTHER CEILING FEATURES.
8. AN 8 1/2" X 11" SPECIFICATION IS A PART OF THESE CONSTRUCTION DOCUMENTS.
9. INSTALLATION OF THE SPRINKLER SYSTEM SHALL NOT BE STARTED UNTIL COMPLETE PLANS AND SPECIFICATIONS, INCLUDING WATER SUPPLY INFORMATION AND TYPE OD EXISTING SPRINKLER SYSTEM. IF ANY, HAVE BEEN APPROVED BY THE DSA. AT VARIES STAGES AND UPON COMPLETION, THE SYSTEM MUST BE TESTED IN THE PRESENCE OF THE INSPECTOR OF RECORD.
10. THE AUTOMATIC SPRINKLER SYSTEM SHALL CONFORM TO THE REQUIREMENTS OF UBC STANDARD 9-1 (NFPA PAMPHLET 13 1999 EDITION).
11. THE AUTOMATIC SPRINKLER SYSTEM WATER FLOW ALARM SHALL ACTIVATE THE FIRE ALARM SYSTEM. THE FIRE MARSHALL SHALL TRANSMIT THE ALARM, SUPERVISORY, AND TROUBLE SIGNALS TO AN APPROVED SUPERVISING STATION (CBC SEC. 1006.2.4.2.2.1.5)
12. SPRINKLERS ARE A DEFERRED APPROVAL AND SHALL NOT BE INSTALLED UNTIL THE PLANS ARE APPROVED BY DSA.

## FIRE PROTECTION NOTES

THE SEISMIC ANCHORAGE OF MECHANICAL AND PLUMBING EQUIPMENT SHALL CONFORM TO C.C.R. TITLE 24, 2001 CBC SECTION 1632A.1 AND TABLE 16A-0. FOR SUSPENDED OR WALL MOUNTED EQUIPMENT WEIGHING LESS LESS THAN 20 LBS. AND OTHER EQUIPMENT WEIGHING LESS THAN 400 LBS. WHERE ANCHORAGE DETAILS ARE NOT SHOWN ON THE DRAWINGS, THE FIELD INSTALLATION SHALL BE SUBJECT TO THE APPROVAL OF THE ARCHITECT, STRUCTURAL ENGINEER AND THE FILED REPRESENTATIVE OF THE OFFICE OF THE STATE ARCHITECT.

## EQUIPMENT BRACING & ANCHORAGE NOTES

ALL PLUMBING EQUIPMENT & PIPES SHALL BE INSTALLED WITH SEISMIC RESTRAINTS PER "GUIDELINES FOR SEISMIC RESTRAINTS OF MECHANICAL SYSTEMS AND PLUMBING SYSTEMS" PUBLISHED BY SMACNA AND APPROVED BY DSA.

WHERE BRACING AND ANCHORAGE DETAILS ARE NOT SHOWN ON THE DRAWINGS OR IN THE GUIDELINES, THE INSTALLATION SHALL BE SUBJECT TO THE APPROVAL OF THE ARCHITECT, THE STRUCTURAL ENGINEER, AND THE DSA FIELD ENGINEER.

A COPY OF THE GUIDELINES PUBLISHED BY SMACNA AND APPROVED BY DSA SHALL BE PROVIDED BY THE CONTRACTOR AND KEPT ON THE JOB SITE AT ALL TIMES.

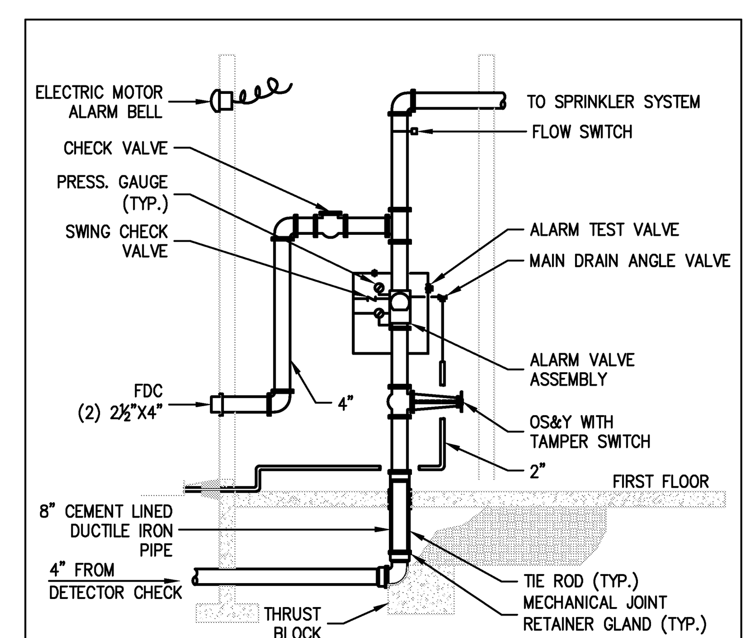


## FIRE SPRINKLER RISER (1)

## LEGEND

- COLD WATER PIPING (CW)
- HOT WATER PIPING (HW)
- TW — TEMPERED WATER PIPING (TW)
- HOT WATER RETURN PIPING (HWR)
- ICW — INDUSTRIAL COLD WATER PIPING (ICW)
- WATER PIPING, BELOW
- SANITARY WASTE PIPING (SAN, W)
- GW — GREASE WASTE PIPING, (GW)
- CW&V — COMBINATION WASTE AND VENT PIPING, (CW&V)
- SED — SEWAGE EJECTOR DISCHARGE PIPING, (SED)
- IW — INDIRECT WASTE PIPING (IW)
- CD — CONDENSATE DRAIN PIPING (CD)
- WASTE PIPING, BELOW
- SANITARY VENT PIPING (V)
- VENT PIPING, BELOW
- SD — STORM DRAIN PIPING (SD)
- OD — OVERFLOW DRAIN PIPING (OD)
- SPD — SUMP PUMP DISCHARGE PIPING (SPD)
- DRAINAGE PIPING, BELOW
- G — NATURAL GAS PIPING (G)
- MPG — MEDIUM PRESSURE GAS PIPING (MPG)
- CA — COMPRESSED AIR (CA)
- LPS — LOW PRESSURE STEAM (LPS)
- LPC — LOW PRESSURE CONDENSATE (LPC)
- MPS — MEDIUM PRESSURE STEAM (MPS)
- MPC — MEDIUM PRESSURE CONDENSATE (MPC)
- HPS — HIGH PRESSURE STEAM (HPS)
- HPC — HIGH PRESSURE CONDENSATE (HPC)
- PC — PUMPED CONDENSATE (PC)
- $O_2$ — OXYGEN (O2)
- MA — MEDICAL AIR (MA)
- MV — MEDICAL VACUUM (MV)
- $NO_2$ — NITROUS OXIDE (NO2)
- F — FIRE PROTECTION STANDPIPE (F)
- SPK — AUTOMATIC FIRE SPRINKLER PIPING (SPK)
- DR — DRAIN PIPING (DR)
- EX — EXISTING PIPING (EX)
- ELBOW / SWEEP
- ELBOW / SWEEP UP
- ELBOW / QUARTER BEND DOWN (DN)
- TEE / WYE AND EIGHTH BEND
- TEE / WYE AND EIGHTH BEND UP
- TEE / SANITARY TEE DOWN (DN)
- CONTINUATION (CONT)
- GATE VALVE (GV), SHUT-OFF VALVE (SOV)
- BALL VALVE (BV)
- GLOBE VALVE (GLV)
- VALVE IN RISER
- ANGLE VALVE (AV)
- BUTTERFLY VALVE (BFV)
- OUTSIDE SCREW AND YOLK GV (OSY)
- THERMOSTATIC MIXING VALVE (TMV)
- PRESSURE REDUCING VALVE (PRV)
- SOLENOID VALVE (SOL)
- CHECK VALVE (CV)
- STRAINER (STR)
- UNION (UN)
- ANGLE STOP (STOP)
- ANGLE STOP (STOP) HOT WATER
- PRESSURE & TEMP RELIEF VALVE (P&TRV)
- PLUG VALVE (PV), GAS COCK (GC)
- GAS PRESSURE REGULATOR (GPR)
- EARTHQUAKE SHUT-OFF VALVE (EQV)
- REDUCED PRESSURE PRINCIPLE BACKFLOW DEVICE (RPBFD)
- DOUBLE CHECK VALVE (DCV)
- DOUBLE CHECK VALVE WITH DETECTOR METER ASSEMBLY (DDCV)
- MECHANICAL EXPANSION JOINT
- BACKWATER (SEWAGE) VALVE (BWV)
- AUTOMATIC FIRE SPRINKLER RISER (ASR)
- FLOOR CONTROL ASSEMBLY (FCA)
- FIRE DEPARTMENT CONNECTION (FDC)
- FIRE PUMP TEST HEADER (FPTH)
- FIRE HOSE VALVE (FHV)
- FIRE HOSE CABINET (FHC)
- POST INDICATOR VALVE (PIV)
- TEMPERATURE GAUGE
- PRESSURE GAUGE
- TRAP PRIMER (TP)
- SHOCK ABSORBER (SA)
- CAP
- CLEAN-OUT (CO)
- WALL CLEAN-OUT (WCO)
- FLOOR CLEAN-OUT (FCO)
- FLOOR DRAIN (FD)
- AREA DRAIN (AD)
- FLOOR SINK (FS)
- ROOF DRAIN (RD)
- OVERFLOW DRAIN (OD)
- INDIRECT WASTE RECEPTOR (IWR)
- HUB DRAIN (HD), STANDPIPE
- AIR GAP FITTING (AG)
- HOSE BIB (HB)
- WALL HYDRANT (WH)
- PUMP
- METER (MTR)
- CEILING ACCESS PANEL (AP)
- WALL ACCESS PANEL (AP)
- POINT OF CONNECTION (POC)
- DIRECTION OF FLOW
- 1% SLOPE — SLOPE
- NOTE NUMBER — NOTE REFERENCE
- DETAIL NUMBER / SHEET NUMBER — DETAIL REFERENCE
- EQUIPMENT TYPE / EQUIPMENT NUMBER — EQUIPMENT DESIGNATION
- SYSTEM TYPE / RISER NUMBER — RISER DESIGNATION

## SHEET INDEX

| SHEET | TITLE | SCALE |
|---|---|---|
| P-0.1 | PLUMBING LEGEND, NOTES & SCHEDULES | NONE |
| P-1.1 | PLUMBING SITE PLAN | 1" = 50'-0" |
| P-A2 | BLDG "A" PLUMBING FLOOR & ROOF PLANS | 1/8"=1'-0" |
| P-B2 | BLDG "B" PLUMBING FLOOR & ROOF PLANS | 1/8"=1'-0" |
| P-C2 | BLDG "C" PLUMBING FLOOR & ROOF PLANS | 1/8"=1'-0" |
| P-DE2 | BLDG'S "D" & "E" PLUMBING FLOOR & ROOF PLANS | 1/8"=1'-0" |
| P-F2 | BLDG "F" PLUMBING FLOOR & ROOF PLANS | 1/8"=1'-0" |
| P-K2 | BLDG "K" PLUMBING FLOOR & ROOF PLANS | 1/4"=1'-0" |
| P-4.1 | BLDG "A" ENLARGED PLUMBING PLAN | 1/4"=1'-0" |
| P-4.2 | BLDG "C" ENLARGED PLUMBING RESTROOM PLAN | 1/4"=1'-0" |
| P-4.3 | BLDG'S "D" & "E" ENLARGED PLUMBING RESTOOM PLANS | 1/4"=1'-0" |

## ABREVIATIONS

| | |
|---|---|
| ABV | ABOVE |
| ACC | ACCESSIBLE |
| AD | AREA DRAIN |
| ADA | AMERICANS WITH DISABLITIES ACT |
| AFF | ABOVE FINISHED FLOOR |
| AFG | ABOVE FINISHED GRADE |
| AN | ACID NEUTRALIZER |
| ANSI | AMERICAN NATIONAL STANDARDS INSTITUTE |
| AP | ACCESS PANEL, ALARM PANEL |
| ASME | AMERICAN SOCIETY OF MECHANICAL ENGINEERS |
| ASPE | AMERICAN SOCIETY OF PLUMBING ENGINEERS |
| ASSY | ASSEMBLY |
| ASTM | AMERICAN SOCIETY FOR TESTING AND MATERIALS |
| BEL | BELOW |
| BFF | BELOW FINISHED FLOOR |
| BFG | BELOW FINISHED GRADE |
| BOB | BOTTOM OF BEAM |
| BSMT | BASEMENT |
| BT | BATHTUB |
| BTUH | BRITISH THERMAL UNIT PER HR. |
| CBC | CALIFORNIA BUILDING CODE |
| CBC | CALIFORNIA BUILDING CODE |
| CBC | CALIFORNIA BUILDING CODE |
| CF | CUBIC FEET |
| CFH | CUBIC FEET PER HOUR |
| CFM | CUBIC FEET PER MINUTE |
| CI | CAST IRON |
| CL | CENTERLINE |
| CLG | CEILING |
| CP | CIRCULATING PUMP |
| CONN | CONNECT, CONNECTION |
| CONT | CONTINUE, CONTINUATION, |
| CPC | CALIFORNIA PLUMBING CODE |
| DCV | DOUBLE CHECK VALVE |
| DCDA | DOUBLE CHECK DETECTOR ASSEMBLY |
| DF | DRINKING FOUNTAIN |
| DIA, ø | DIAMETER |
| DN | DOWN |
| DPX | DUPLEX |
| DR | DRAIN |
| DT | DAY TANK |
| DWG | DRAWING |
| EFF | EFFICIENCY |
| ELEV | ELEVATION |
| ELEC | ELECTRICAL |
| EQP | EQUIPMENT |
| ESH | EMERGENCY SHOWER |
| EVB | ELVATED VACUUM BREAKER |
| EW | EMERGENCY EYE WASH |
| EWSH | EMERGENCY EYE WASH / SHOWER |
| EWC | ELECTRIC WATER COOLER |
| EWH | ELECTRIC WATER HEATER |
| EX | EXISTING |
| °F | DEGREES FAHRENHEIT |
| FDC | FIRE DEPARTMENT CONNECTION |
| FFE | FINISHED FLOOR ELEVATION |
| FL | FLOOR, FLOW LINE |
| FM | FACTORY MUTUAL |
| FOP | FUEL OIL PUMP |
| FPS | FEET PER SECOND |
| FT | FEET, FLUSH TANK |
| FU | FIXTURE UNITS |
| FUD | FUNNEL DRAIN |
| FURN | FURNISH |
| FUT | FUTURE |
| FV | FLUSH VALVE |
| GAL | GALLONS |
| GC | GENERAL CONTRACTOR |
| GI | GREASE INTERCEPTOR |
| GT | GREASE TRAP |
| GPF | GALLONS PER FLUSH |
| GPH | GALLONS PER HOUR |
| GPM | GALLONS PER MINUTE |
| GWH | GAS FIRED WATER HEATER |
| HD | HEAD |
| HDR | HEADER |
| HLA | HIGH LIMIT ALARM |
| HORIZ | HORIZONTAL |
| HP | HORSEPOWER |
| HTR | HEATER |
| HVAC | HEATING VENTILATING AND AIR CONDITIONING |
| HX | HEAT EXCHANGER |
| HZ | HERTZ |
| IC | IRRIGATION CONTRACTOR |
| IE | INVERT ELEVATION |
| IN | INCHES |
| INST | INSTALL |
| IRR | IRRIGATION |
| JC | JANITOR'S CLOSET |
| KEC | KITCHEN EQUIPMENT CONTRACTOR |
| KW | KILOWATT |
| LAV | LAVATORY |
| LAP | LOCAL ALARM PANEL |
| M | METER |
| MAX | MAXIMUM |
| MH | MAN HOLE |
| MIN | MINIMUM |
| MS | MOP SINK |
| MTD | MOUNTED |
| NC | NORMALLY CLOSED |
| NEMA | NATIONAL ELECTRICAL MANUFACTURERS ASSOCIATION |
| NFPA | NATIONAL FIRE PROTECTION ASSOCIATION |
| NIC | NOT IN PLUMBING CONTRACT |
| NO | NORMALLY OPEN |
| OC | ON CENTER |
| OSHA | OCCUPATIONAL SAFETY AND HEALTH ACT |
| OSHPD | OFFICE OF STATEWIDE HEALTH PLANNING AND DEVELOPMENT |
| PD | PLANTER DRAIN |
| PH | PHASE |
| PIV | POST INDICATOR VALVE |
| PLBG | PLUMBING |
| PO | PLUGGED OUTLET |
| PROV | PROVIDE (FURNISH & INSTALL) |
| PRESS | PRESSURE |
| PS | PRESSURE SWITCH |
| PSI | POUNDS PER SQUARE INCH |
| PVB | PRESSURE VACUUM BREAKER |
| RCIP | RECTANGULAR CAST IRON PIPE |
| RCV | RISER CONTROL VALVE |
| RI&C | ROUGH IN & CONNECT |
| RM | ROOM |
| RP | RATED PRESSURE |
| RPM | REVOLUTIONS PER MINUTE |
| RVB | RECESSED VALVE BOX |
| S, SK | SINK |
| SA | SHOCK ABSORBER (WHA) |
| SE | SEWAGE EJECTOR |
| SF | SQUARE FEET |
| SH | SHOWER |
| SL | SLOPE |
| SP | SUMP PUMP |
| SPEC | SPECIFICATIONS |
| SPR | SPRINKLER |
| SPX | SIMPLEX |
| SS | STAINLESS STEEL |
| TC | TIME CLOCK |
| TD | TRENCH DRAIN |
| TEMP | TEMPERATURE, TEMPORARY |
| TMV | THERMOSTATIC MIXING VALVE |
| TOB | TOP OF BEAM |
| TP | TRAP PRIMER |
| THRU | THROUGH |
| TS | TAMPER SWITCH |
| TTB | TIGHT TO BEAM |
| TYP | TYPICAL |
| UBC | UNIFORM BUILDING CODE |
| UL | UNDERWRITERS LABORATORY |
| UON | UNLESS OTHERWISE NOTED |
| UPC | UNIFORM PLUMBING CODE |
| UR | URINAL |
| USSG | UNITED STATES STANDARD GAUGE |
| UTR | UP THROUGH ROOF |
| VERT | VERTICAL |
| VO | VALVED OUTLET |
| VTR | VENT THROUGH ROOF |
| W/ | WITH |
| W/O | WITHOUT |
| WC | WATER COLUMN, WATER CLOSET |
| WHA | WATER HAMMER ARRESTOR (SA) |
| WM | WATER METER |
| WT | WEIGHT |
| WP | WORKING PRESSURE |
| VB | VACUUM BREAKER, VALVE BOX |
| ZCV | ZONE CONTROL VALVE |

LICENSED ARCHITECT JAMES M. STINSON C19098 RENEWAL 02/28/13 STATE OF CALIFORNIA

IDENTIFICATION STAMP DIV. OF THE STATE ARCHITECT OFFICE OF REGULATION SERVICES
APPL 04-107199
AC____ FLS____ SS____ DATE____

South Coast Engineering Group, Inc.
5000 N. Pkwy. Calabasas, Suite 307
Calabasas, California 91302
tel (818) 224-2700 fax (818) 224-2711

REGISTERED PROFESSIONAL ENGINEER PETER A. KRAUT No. M-31498 EXP. 12-31-12 MECHANICAL STATE OF CALIFORNIA

DATE | REVISIONS

P S W C GROUP
ARCHITECTS / PLANNERS
1887 BUSINESS CENTER DR., SUITE 3, SAN BERNARDINO, CA. 92408
909/890-2233 FAX. 909/890-2644

ROOSEVELT II
ELEMENTARY SCHOOL
SAN BERNARDINO CITY UNIFIED SCHOOL DISTRICT
1261 W. 16TH STREET, SAN BEERNARDINO, CA.

PLUMBING LEGEND
GENERAL NOTES,
ABBREVIATIONS & SCHEDULES
SCALE: NONE

JOB NO. 55B1.02
DRAWN BY LE
DATE 12/09/2011

P-0.1

P:\Project\55B1.02\P\P-01.dwg

RE-BID #F09-02 ROOSEVELT II (HENRY) E.S. NEW CONSTRUCTION BID ISSUANCE SET 12/09/11

Drawing Name: P:\Project\55B1.02\P\P-01.dwg
Date / Time: Dec 07, 2011 - 11:20am by pcastillo