SEE SHEET A-7.1
FOR SYMBOLS LEGEND

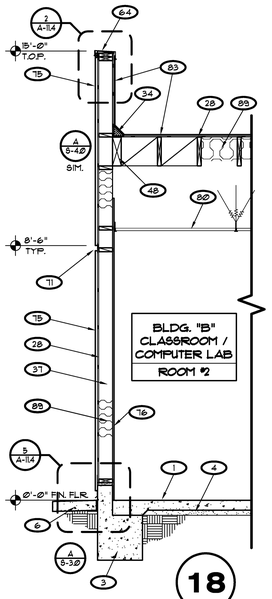

18

BLDG. SECT. A/A-B3
BLDG. "B"

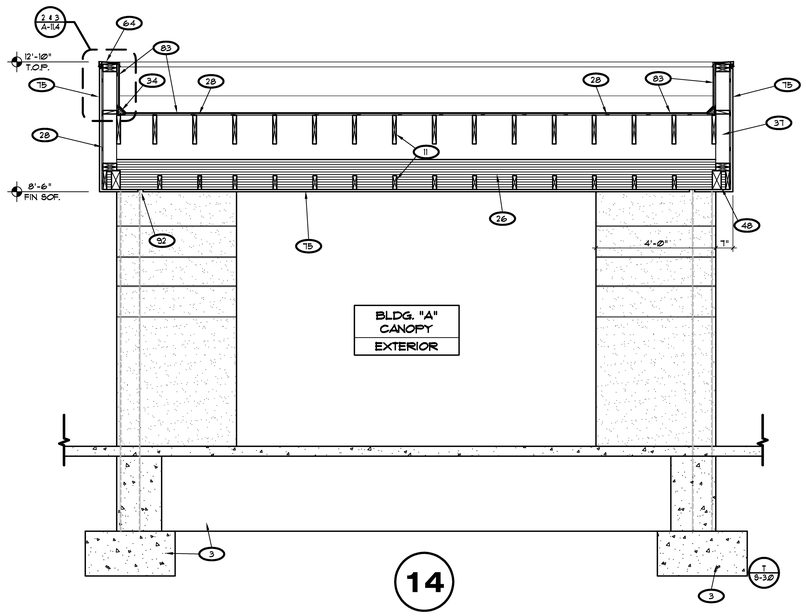

14

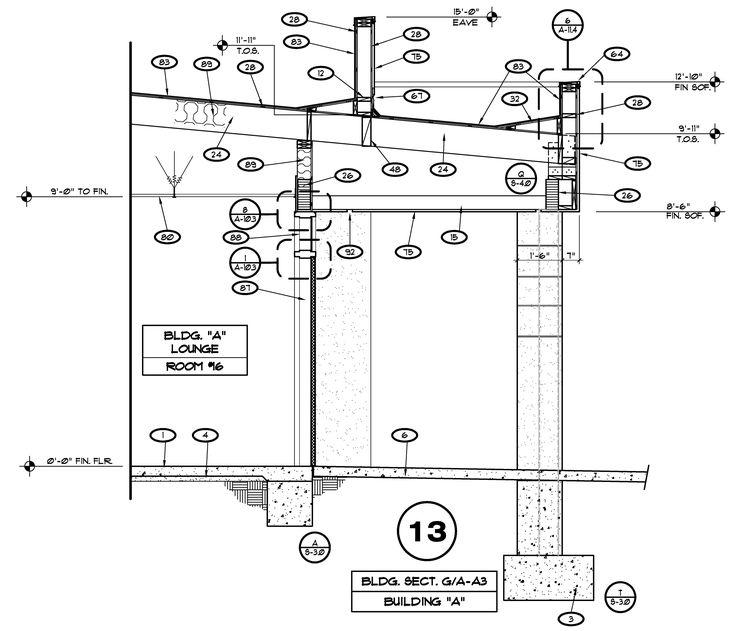

13

BLDG. SECT. G/A-A3
BUILDING "A"

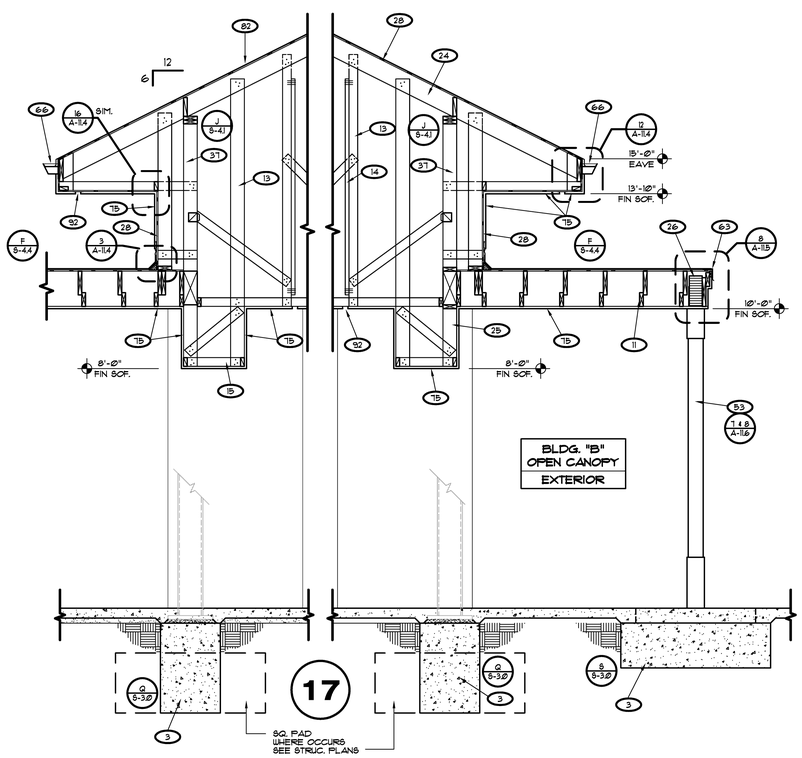

17

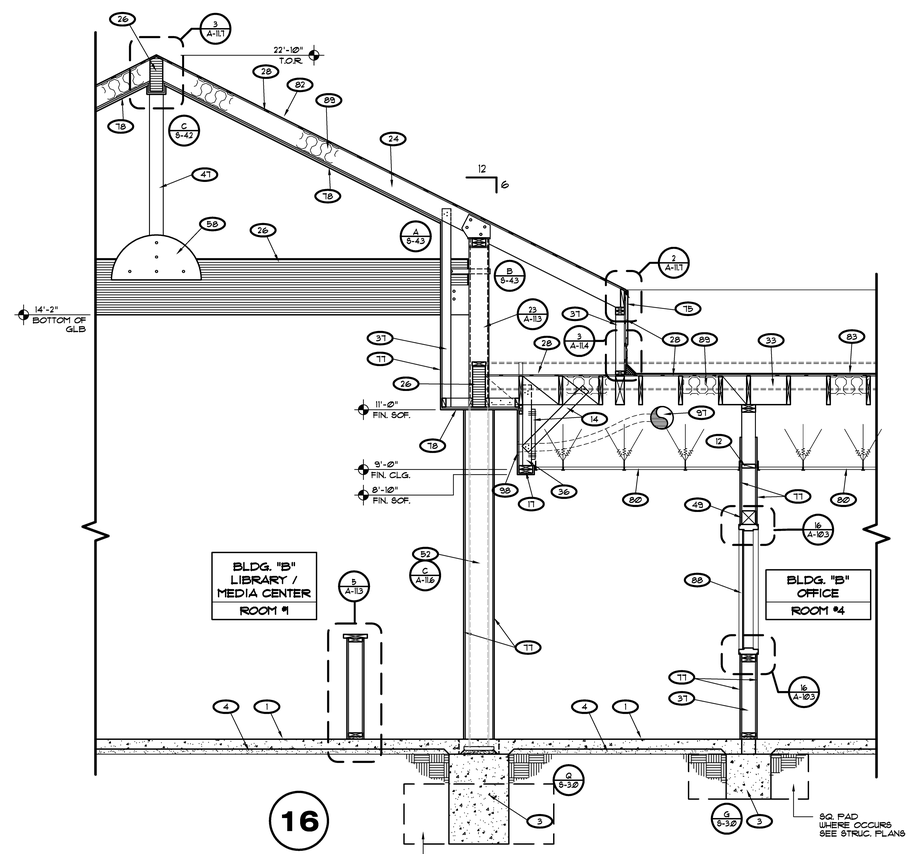

16

BLDG. SECT. A/A-B3
BLDG. "B"

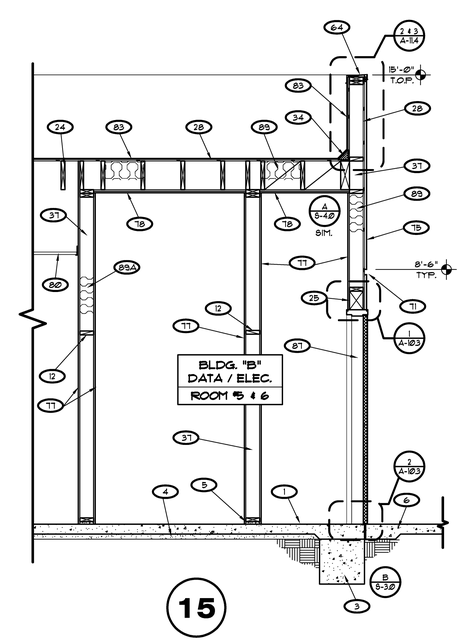

15

BLDG. SECT. A/A-B3
BLDG. "B"

LICENSED ARCHITECT
JAMES M. SEFERIAN
C19098
RENEWAL 02/28/
STATE OF CALIFORNIA

REVISIONS	DATE
1	
2	
3	
4	
5	

P S W C GROUP
ARCHITECTS / PLANNERS
1897 BUSINESS CENTER DR., SUITE 3, SAN BERNARDINO, CA. 92408
909/890-2233 FAX. 909/890-2844

ROOSEVELT II
ELEMENTARY SCHOOL
SAN BERNARDINO CITY UNIFIED SCHOOL DISTRICT
1261 W. 16TH STREET, SAN BERNARDINO, CA.

WALL SECTIONS

SCALE 1/8" = 1'-0"

JOB NO. P520
DRAWN BY
DATE 8/7/2011

A-7.3

RE-BID #F09-02 ROOSEVELT II (HENRY) E.S. NEW CONSTRUCTION BID ISSUANCE SET 12/09/11