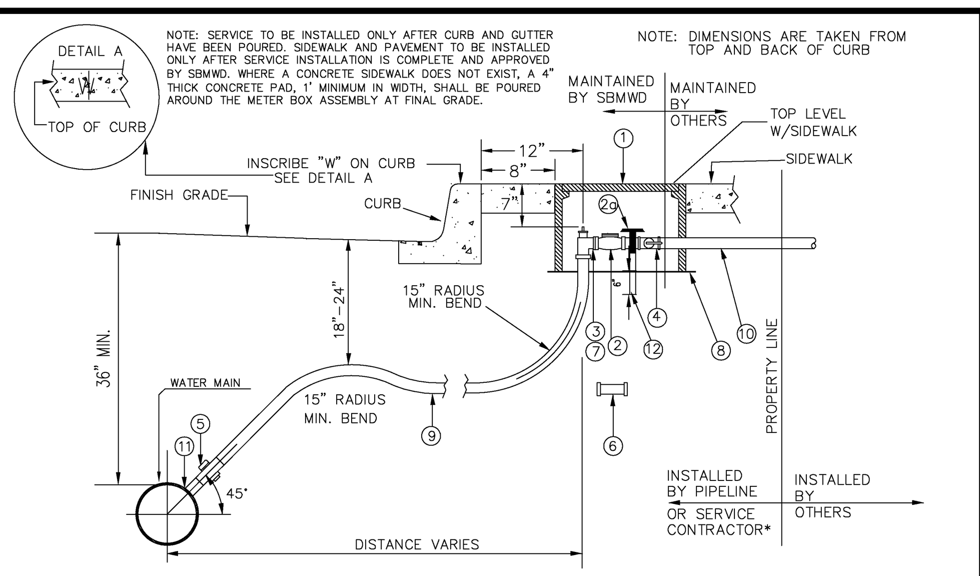

ITEM	QTY	DESCRIPTION
1	1 EA	20"x14"x12" METER BOX (ARMORCAST A6001425A OR EQUAL) (W/ "WATER" OR "SBMWD" ON LID)
2	1 EA	(5/8"x3/4", 3/4"x3/4", OR 1"x1") MULTIJET WATER METER (MODEL PMM-REGISTER IN CUBIC FEET)
OR		
2a	1 EA	SBMWD APPROVED METER AND TRANSMITTER ASSEMBLY, ITRON 60W OR APPROVED EQUAL. INSTALL MOUNTING PER MANUFACTURERS SPEC (NEW TRACTS OR AS DIRECTED BY SBMWD ONLY)
3	1 EA	(1"x3/4", OR 1"x1") LOCKWING (BALL) ANGLE VALVE (COMPRESSION x METER COUPLING) (JONES J1963WSG OR EQUIVALENT)
4	1 EA	(3/4" OR 1") LOCKWING BALL VALVE (FEMALE NPT x METER COUPLING) [JAMES JONES J-1908W OR EQUAL](NON-LOCKWING VALVE ACCEPTABLE)
5	1 EA	ROTATE HANDLE 90° TO AVOID INTERFERENCE WITH METER CAP (HANDLE UP WHEN OFF)
6	1 EA	1" BRASS CORPORATION STOP (COMPRESSION x MALE NPT) (MUELLER H15028 OR EQUAL)
7	1 EA	3/4" OR 1" METER IDLER (JUMPER) (MALE METER COUPLING BY MALE METER COUPLING) TO BE USED IN PLACE OF METER DURING CONSTRUCTION
8	1 EA	1/4" HARDWARE CLOTH (HOG WIRE) FOR RODENT CONTROL
9	___FT	1" TYPE K SOFT COPPER TUBING (SBMWD APPROVED U.S. MANUFACTURE) SEE SPECIFICATIONS FOR BACKFILL REQUIREMENTS.
10	___"	(3/4", OR 1") SCHEDULE 80 THREADED (NPT) PVC PIPE NIPPLE (MUST EXTEND 6" BEYOND CUSTOMER SIDE OF SIDEWALK)
11	1 EA	TAP MAIN DIRECTLY USING SBMWD APPROVED TAPPING MACHINE OR DRILL CLEAN 1" DIA. HOLE IN MAIN AND USE APPROVED SERVICE SADDLE.
12	6"	3/8" REBAR, 1/2" REBAR, 5/8" REBAR, AND/OR 1/2" SHC 40 PVC. INSTALL PER MANUFACTURERS INSTRUCTIONS WITH PIT MOUNTING BRACKET SUPPLIED.

KIT FOR DEVELOPER INSTALLED SERVICES WATER SERVICE INSTALLATION (items 1, 2, 2a)

* MAINTAINED BY CONTRACTOR DURING ONE (1) YEAR WARRANTY PERIOD
NOTE: TAP AND LATERAL SIZE IS ONE (1) INCH DIAMETER.

3/4" AND 1" SERVICE DETAIL

SCALE: N.T.S. — STD DETAIL (W1.1) — 1 / CD1 / C1

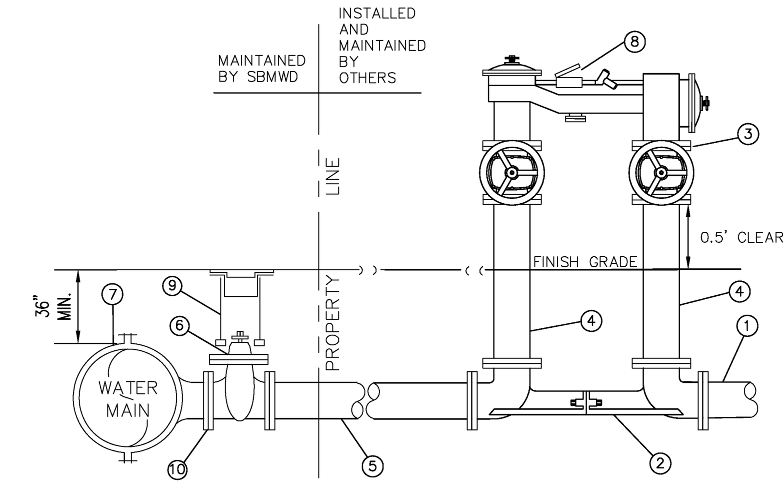

ITEM	QTY	DESCRIPTION
1	4 LF	STUB-OUT FOR SERVICE CONNECTION (MATERIAL SPECIFIED BY CUSTOMER)
2	1 EA	___" VALVE SETTER
3	1 EA	___" DOUBLE CHECK DETECTOR ASSEMBLY (FEBCO 876/876V OR APPROVED EQUAL)
4	2 EA	___" SCH. 40 STEEL OR DUCTILE IRON PIPE SPOOLS
5	___LF	___" PRESSURE CLASS 350 DUCTILE IRON PIPE (RESTRAINED) SEE SPECIFICATIONS FOR BACKFILL REQUIREMENTS
6	1 EA	___" FLANGE BY M.J. GATE VALVE ASSY PER SBMWD STD W 3.1
7	1 EA	EPOXY COATED TAPPING SLEEVE, MJ TAPPING SLEEVE, WELD NOZZLE, OR MJxFLG TEE ___" O.D. MAIN WITH ___" SERVICE LATERAL
8	1 EA	5/8" x 3/4" BADGER MODEL M25LL WATER METER AND TRANSMITTER ASSEMBLY, ITRON OR APPROVED EQUAL. (METER TO BE PURCHASED FROM SBMWD PRIOR TO INSTALLATION). INSTALL PER MANUFACTURERS SPEC
9	1 EA	8" GATE VALVE CAN ASSEMBLY PER SBMWD STD. DWG. W3.3
10	1 EA	PIPELINE SEAL AND INSULATOR, INC INSULATING KIT TO BE USED BETWEEN THE TAPPING SADDLE AND VALVE WHEN DISSIMILAR METALS (DUCTILE IRON AND STEEL) ARE INVOLVED

4" AND LARGER ABOVE GROUND FURE SERVICE DOUBLE CHECK DETECTOR CHECK ASSEMBLY

SCALE: N.T.S. — STD DETAIL (W1.14) — 2 / CD1 / C1

RECOMMENDED APPLICATION OF WATER METERS					
DOMESTIC SERVICES					
1-1/2"	2"	3"	4"	6"	NOTES:
Precision PMM Multi-Jet Meter 60 gpm ANSI/AWWA C708-96 pg 6	Precision PMM Multi-Jet Meter 80 gpm ANSI/AWWA C708-96 pg 6	Neptune TruFlo Compound Meter *See Note 160 gpm AWWA C708-96 pg 6	Neptune TruFlo Compound Meter *See Note 250 gpm AWWA C708-96 pg 6	Neptune TruFlo Compound Meter *See Note 500 gpm AWWA C708-96 pg 6	* 3", 4" and 6" TruFlo Compounds need strainer upstream *No test port needed
DOMESTIC and FIRE SERVICES: (Combination Meter)					
4"	6"	8"	10"	NOTES:	
Neptune Protectus III 500 gpm ANSI/AWWA C703-96 pg 7	Neptune Protectus III 1,150 gpm ANSI/AWWA C703-96 pg 7	Neptune Protectus III 2,000 gpm ANSI/AWWA C703-96 pg 7	Neptune Protectus III 3,100 gpm ANSI/AWWA C703-96 pg 7	All sizes need 2" test port installed down stream of meter. All meters should register in cubic feet.	
IRRIGATION OR DOMESTIC (Depends on Application)					
1-1/2"	2"	3"	4"	6"	8"
Sensus W120 DRS Turbo Meter 50 gpm ANSI/AWWA C701-88 pg 4	Sensus W160 DRS Turbo Meter 30 gpm ANSI/AWWA C701-88 pg 4	Sensus W350 DRS Turbo Meter Metron-Farnier Single Jet 175 gpm ANSI/AWWA C701-88 pg 4	Sensus W1000 DRS Turbo Meter Metron-Farnier Single Jet 300 gpm ANSI/AWWA C701-88 pg 4	Sensus W2000 DRS With Strainer Turbo Meter *See Notes 525 gpm ANSI/AWWA C701-88 pg 4	Sensus W3500 DR With Strain *See Notes 900 gpm ANSI/AWWA C701-88 pg 4
10"	16"	NOTES:			
Sensus W6500 DR With Strainer *See Notes 1,450 gpm ANSI/AWWA C701-88 pg 4	Sensus W10,000 DR With Strainer *See Notes No Data	6", 8", 10" and 16" need 2" test port installed downstream of meter. HENDY = PRECISION (MAKE OF METER) Install SBMWD Approved Meter Reading Transmitter Assembly. Iron or approved equal for all meters up to 2" as approved by SBMWD			

APPROVED WATER METERS

SCALE: N.T.S. — STD DETAIL (W1.15) — 3 / CD1 / C1

CONFIGURATION OPTIONS

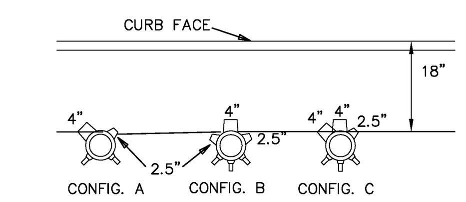

CONFIGURATION	DESCRIPTION
A	1 – 4" OUTLET; 1 – 2.5 " OUTLET
B	1 – 4" OUTLET; 2 – 2.5 " OUTLETS
C	2 – 4" OUTLET; 1 – 2.5 " OUTLET

NOTES:

1. WHERE A CONCRETE SIDEWALK DOES NOT EXIST, A 4" THICK CONCRETE PAD, 3' X 3', SHALL BE POURED AROUND BREAK-OFF VALVE ASSEMBLY AT FINAL GRADE.
2. ALL BOLTS AND NUTS TO BE STANDARD GRADE 5 ZINK PLATED.

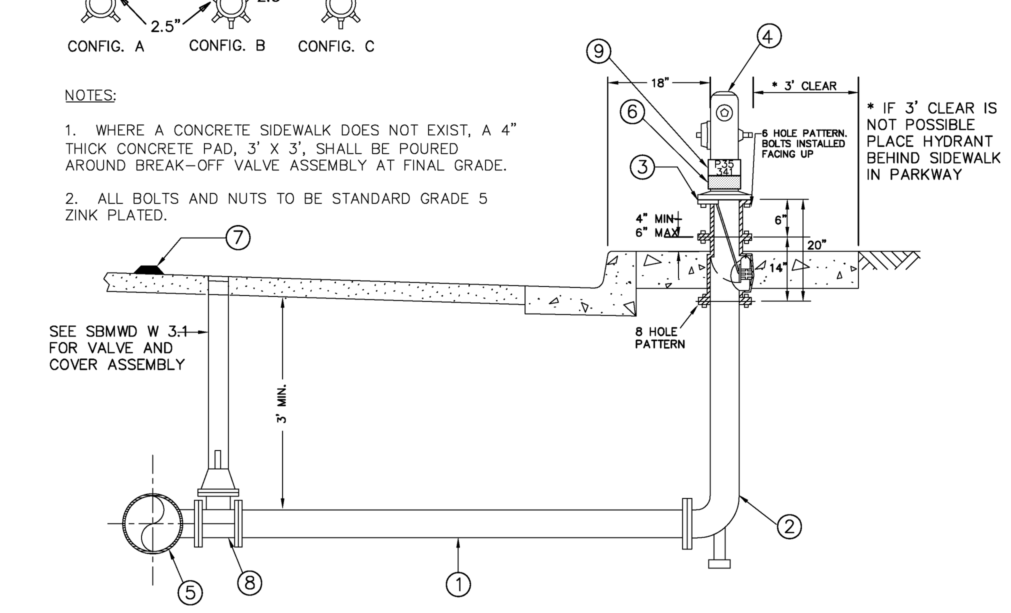

ITEM	QTY	DESCRIPTION
1	___LF	6" CLASS 350 DUCTILE IRON PIPE RESTRAINED WITH MEGALUG OR APPROVED EQUAL
2	1 EA	___" x 6" (8 HOLE) FIRE HYDRANT BURY WITH RESTRAINED MJ INLET AND FLANGE OUTLET
3	1 EA	CLOW VALVE CO. BREAK OFF CHECK VALVE MODEL LB1 400A (NO SUBSTITUTIONS)
4	1 EA	A SBMWD APPROVED HYDRANT (SELECT THE APPROPRIATE CONFIGURATION)
5	1 EA	USE WELD NOZZLE OR TAPPING SLEEVE ON EXISTING MAINS. USE TEE WITH RESTRAINED BRANCH AND RUN ON NEW SYSTEMS.
6	1 EA	3" WIDE COLOR CODED REFLECTIVE MARKING TAPE PER SBMWD STD. DWG. W6.3
7	1 EA	INSTALL BLUE DOT PAVEMENT MARKERS PER SBMWD STD. DWG. W6.3
8	1 EA	INSTALL 6" GATE VALVE, (FLG x MJ) PER SBMWD STD. DWG. W3.1
9	1 EA	INSTALL 6-DIGIT FIRE HYDRANT ALPHANUMERIC IDENTIFICATION NUMBER. SBMWD ENGINEERING TO PROVIDE IDENTIFICATION NUMBER. I.D. SPECS: CHARACTER SIZE = 3/4", PAINT COLOR = BLACK LOCATION = FH BARREL ABOVE 3" WIDE REFLECTIVE MARKING FONT = MARSH STENCIL FONT

6" FIRE HYDRANT INSTALLATION

SCALE: N.T.S. — STD DETAIL (W2.2) — 4 / CD1 / C1

CONFIGURATION OPTIONS

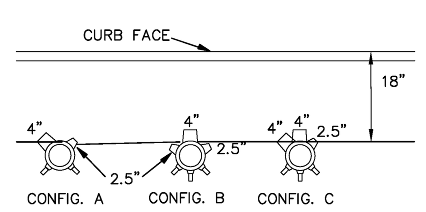

CONFIGURATION	DESCRIPTION
A	1 – 4" OUTLET; 1 – 2.5 " OUTLET
B	1 – 4" OUTLET; 2 – 2.5 " OUTLETS
C	2 – 4" OUTLET; 1 – 2.5 " OUTLET

NOTES:

1. WHERE A CONCRETE SIDEWALK DOES NOT EXIST, A 4" THICK CONCRETE PAD, 3' X 3', SHALL BE POURED AROUND BREAK-OFF VALVE ASSEMBLY AT FINAL GRADE.
2. ALL BOLTS AND NUTS TO BE STANDARD GRADE 5 ZINK PLATED.

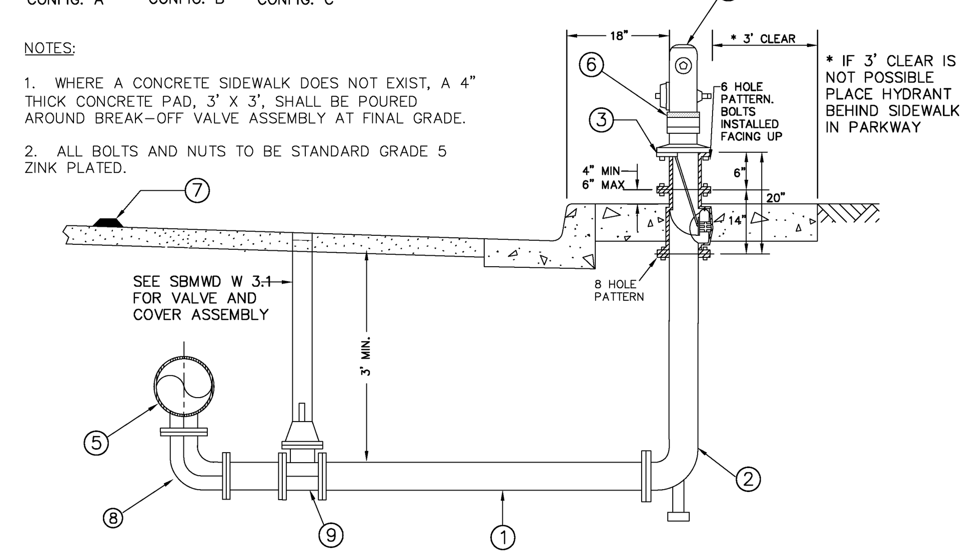

ITEM	QTY	DESCRIPTION
1	___LF	6" CLASS 350 DUCTILE IRON PIPE RESTRAINED WITH MEGALUG OR APPROVED EQUAL
2	1 EA	___" x 6" (8 HOLE) FIRE HYDRANT BURY WITH RESTRAINED MJ INLET AND FLANGE OUTLET
3	1 EA	CLOW VALVE CO. BREAK OFF CHECK VALVE MODEL LB1 400A (NO SUBSTITUTIONS)
4	1 EA	A SBMWD APPROVED HYDRANT (SELECT THE APPROPRIATE CONFIGURATION)
5	1 EA	USE 6" DIP TEE WITH RESTRAINED BRANCH AND RUN ON NEW SYSTEMS.
6	1 EA	3" WIDE COLOR CODED REFLECTIVE MARKING TAPE PER SBMWD STD. DWG. W6.3
7	1 EA	INSTALL BLUE DOT PAVEMENT MARKERS PER SBMWD STD. DWG. W6.3
8	1 EA	INSTALL 6" – 90° DIP ELBOW (FLG X MJ)
9	1 EA	INSTALL 6" GATE VALVE, (FLG x MJ) PER SBMWD STD. DWG. W3.1

6" MANUAL BLOW OFF ASSEMBLY W/ 6" FIRE FIRE HYDRANT INSTALLATION

SCALE: N.T.S. — STD DETAIL (W2.3) — 5 / CD1 / C1

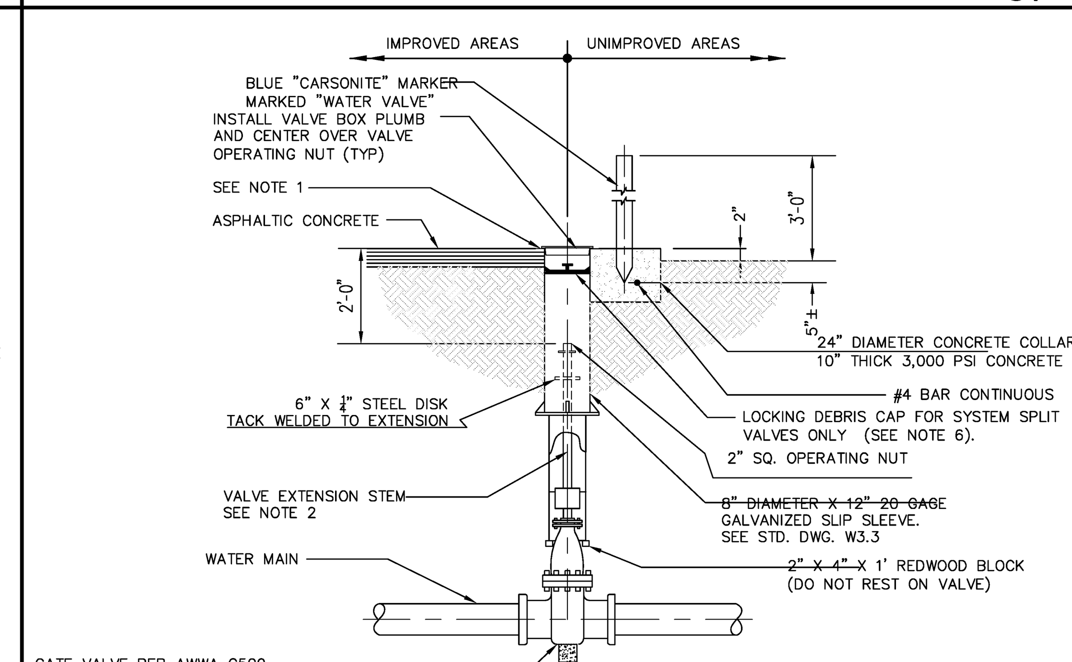

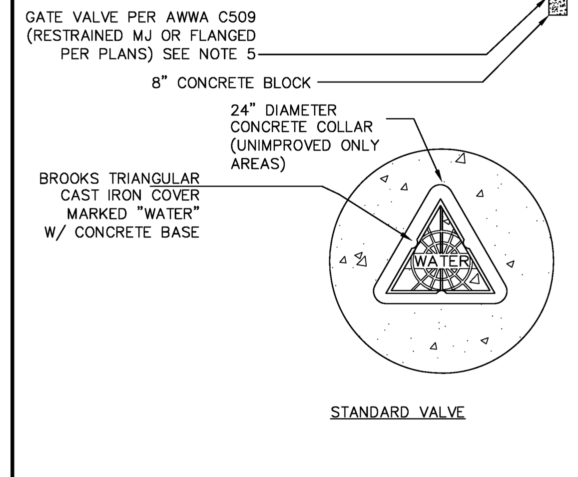

STANDARD VALVE

NOTES:

1. FINAL RIM ELEVATION TO BE 1/8" TO 1/4" BELOW FINAL STREET GRADE.
2. A VALVE EXTENSION STEM SHALL BE PROVIDED WHERE THE DEPTH TO THE OPERATING NUT EXCEEDS FIVE (5) FEET AND SHALL BE 1" BLACK IRON PIPE.
3. CONTRACTOR TO FORM CONCRETE COLLAR IN UNIMPROVED AREAS WITH SONOTUBE AND REMOVE PRIOR TO BACKFILL INSTALLATION (TYP).
4. SEE STANDARD SPECIFICATIONS FOR ALL APPROVED PRODUCTS.
5. GATE VALVE: PER AWWA C509 AND SBMWD APPROVED RESILIENT SEAT GATE VALVE, 150 PSI MINIMUM PRESSURE RATING, INTERNAL EPOXY COATED.
6. SYSTEM SPLIT VALVES (NORMALLY CLOSED VALVES)-SHALL HAVE LOCKING DEBRIS CAP INSTALLED WITH RED TAG WARNING LABELS. RED TAG WARNING LABELS SHALL BE SHOWN ON STD. DWG. W3.3.

TYPICAL GATE VALVE INSTALLATION

SCALE: N.T.S. — STD DETAIL (W3.1) — 6 / CD1 / C1

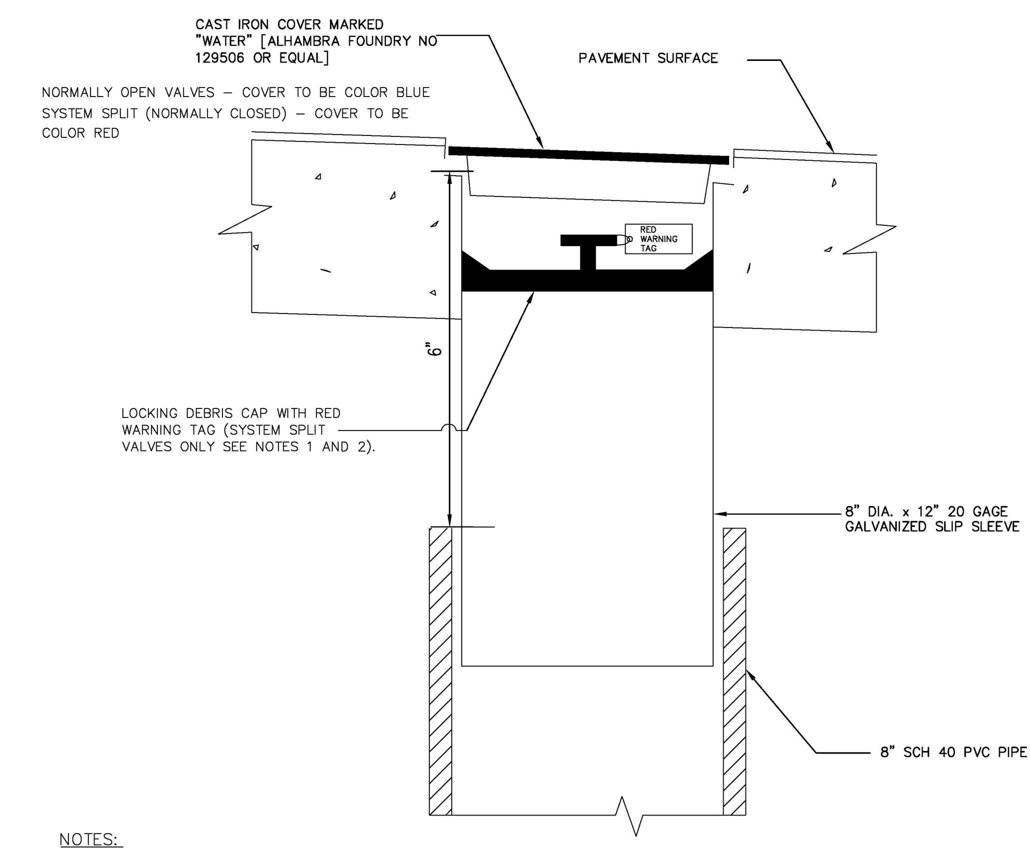

NOTES:

1. LOCKING DEBRIS CAP SHALL BE MODEL NO. LD-B BY S.W. SERVICES, PHOENIX OR APPROVED EQUAL (SYSTEM SPLIT VALVES ONLY)
2. RED WARNING TAG SHALL BE BRIGHT RED PLASTIC AND SHALL READ AS FOLLOWS (SYSTEM SPLIT VALVES ONLY):

> WARNING!
> SYSTEM SPLIT VALVE (NORMALLY CLOSED)
> VALVE TO BE OPERATED BY SBMWD PERSONNEL ONLY
> VALVE ID NO. ________

SBMWD INSPECTOR SHALL FILL IN VALVE ID NO. AND NO. OF TURNS TO CLOSE VALVE. PLACE TAG AND DEBRIS CAP IN CAN AFTER VALVE MAINTENACE.

TYPICA VALVE CAN INSTALLATION

SCALE: N.T.S. — STD DETAIL (W3.3) — 7 / CD1 / C1

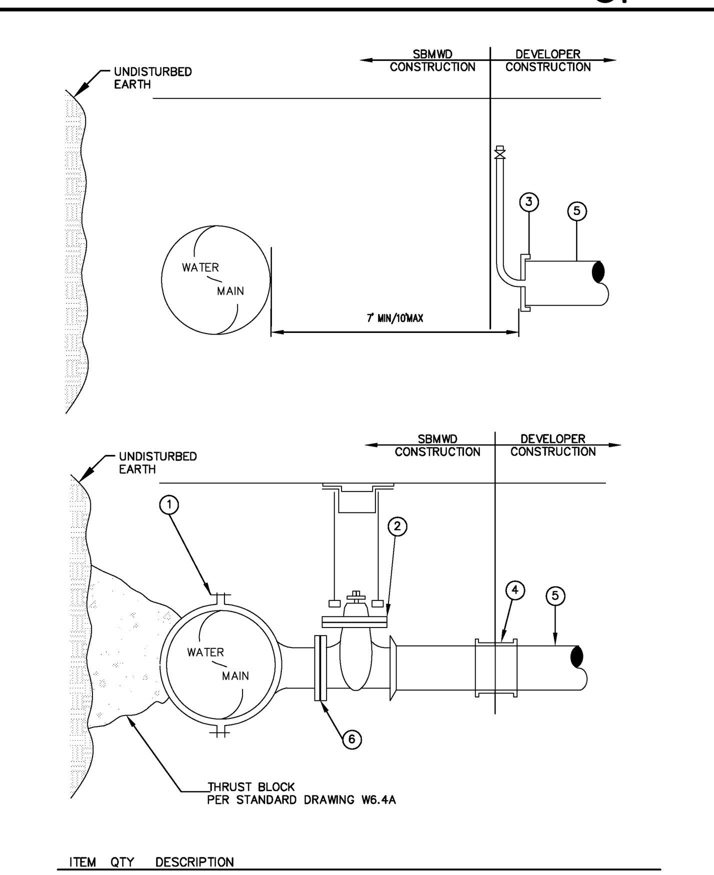

ITEM	QTY	DESCRIPTION
1	1 EA	___" EPOXY COATED TAPPING SADDLE (_____" O.D. x ___" FLG) OR ___" FABRICATED TAPPING SADDLE (_____" O.D. x ___" FLG) OR ___" FABRICATED WELD NOZZLE (_____" O.D. x ___" FLG) ___" STAINLESS STEEL TAPPING SADDLE
2	1 EA	___" FLG X MJ GATE VALVE PER SBMWD STD. W 3.1
3	1 EA	___" END CAP WITH 2" FLUSH PORT (FLUSH PORT PER STD W6.7) (RESTRAINED)
4	1 EA	___" MJ SLEEVE (RESTRAINED W/ "MEGALUG" RESTRAINT)
5	___LF	___" CLASS 350 DUCTILE IRON PIPE (RESTRAINED W/ "MEGALUG" RESTRAINT OR APPROVED EQUAL)
6	1 EA	___" PIPELINE SEAL AND INSULATOR, INC INSULATING KIT TO BE USED BETWEEN THE TAPPING SADDLE AND VALVE WHEN DISSIMILAR METALS (DUCTILE IRON AND STEEL) ARE INVOLVED

TAPPING DETAIL FOR 4" AND LARGER DEVELOPER-INSTALLED MAINS

SCALE: N.T.S. — STD DETAIL (W3.5) — 8 / CD1 / C1

CALL: TOLL FREE
1-800
227-2600
TWO WORKING DAYS BEFORE YOU DIG

UNDERGROUND SERVICE ALERT

REGISTERED PROFESSIONAL ENGINEER MARIA I. FRASER No. 56005 EXP. DATE 12/31/12 CIVIL STATE OF CALIFORNIA

Fraco Enterprises Inc
Engineering and Construction Services
12139 MOUNT VERNON AVE.
SUITE 210
GRAND TERRACE, CA 92313
PHONE: (909) 824-7230
FAX: (909) 824-7385

APPROVED BY:________________________ DATE:_______
REGISTERED CIVIL ENGINEER No. 56005

MARK	REVISIONS	APPROVED	DATE	APPROVED	DATE
DESIGNED BY: MIF	DRAWN BY: JRN CHECKED BY: MIF	DESIGN ENGINEER		SBMWD ENGINEER	

BENCHMARK:

CITY OF SAN BERNARDINO BM# G1-41. ELEVATION 1158.763 FT. BRASS DISK CSB G1-41. 41.25 FT. EAST & 30.0 FT SOUTH OF THE CENTERLINE P.I. OF MT. VERNON & 14TH ST. ;9.75 FT. SOUTH OF THE SOUTH CURB LINE OF 14TH ST. ; 9.25 FT. EAST OF THE EAST CURB LINE OF MT.VERNON AVE. ' 2.0 FT EAST OF THE NORTH/SOUTH SIDEWALK ABOUT 0.2 FEET LOWER THEN THE PAVEMENT.

ELEVATION: 1158.763 FEET/ 353.1916 METERS

CITY OF SAN BERNARDINO
MUNICIPAL WATER DEPARTMENT
WATER IMPROVEMENT PLANS
DR. MILDRED D. HENRY ELEMENTARY SCHOOL
STANDARD DETAILS

DRAWING SCALES:
HORIZ: N/A VERT: N/A
C.O. NO.:

DWG CD1
SHEET 4 OF 6

100% SUBMITTAL

C-DR. MILDRED HENRY D. ELEMENTARY SCHOOL-4-CD-CD1.DWG

RE-BID #F09-02 ROOSEVELT II (HENRY) E.S. NEW CONSTRUCTION BID ISSUANCE SET 12/09/11