SEE SHEET A-7.1
FOR SYMBOLS LEGEND

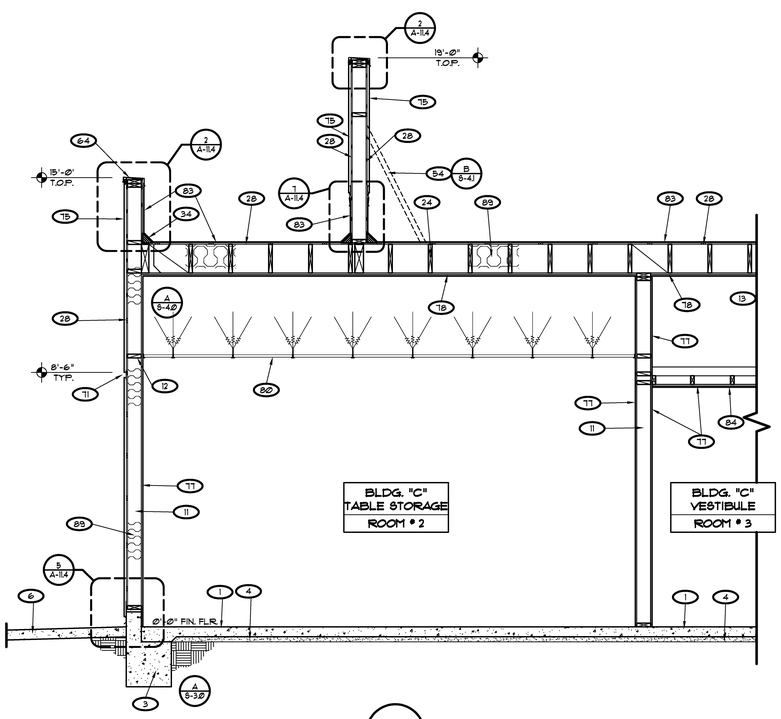

38

BLDG. SECT. F/A-C3
BLDG. "C"

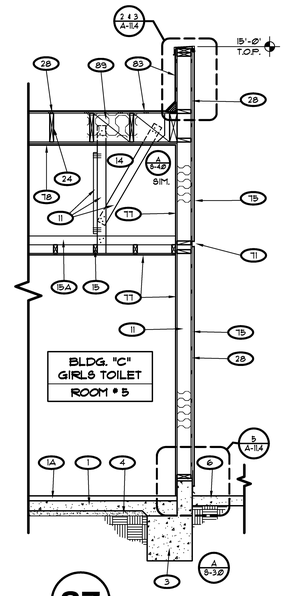

37

BLDG. SECT. F/A-C3
BLDG. "C"

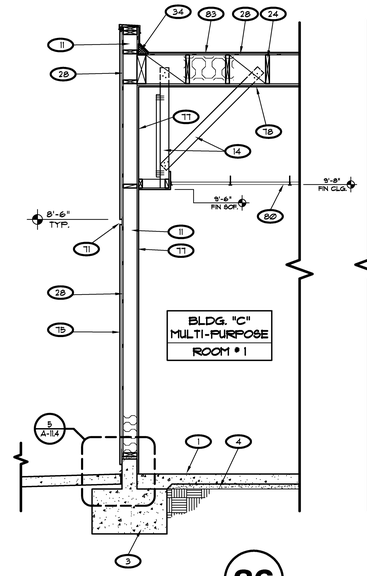

36

BLDG. SECT. E/A-C3
BLDG. "C"

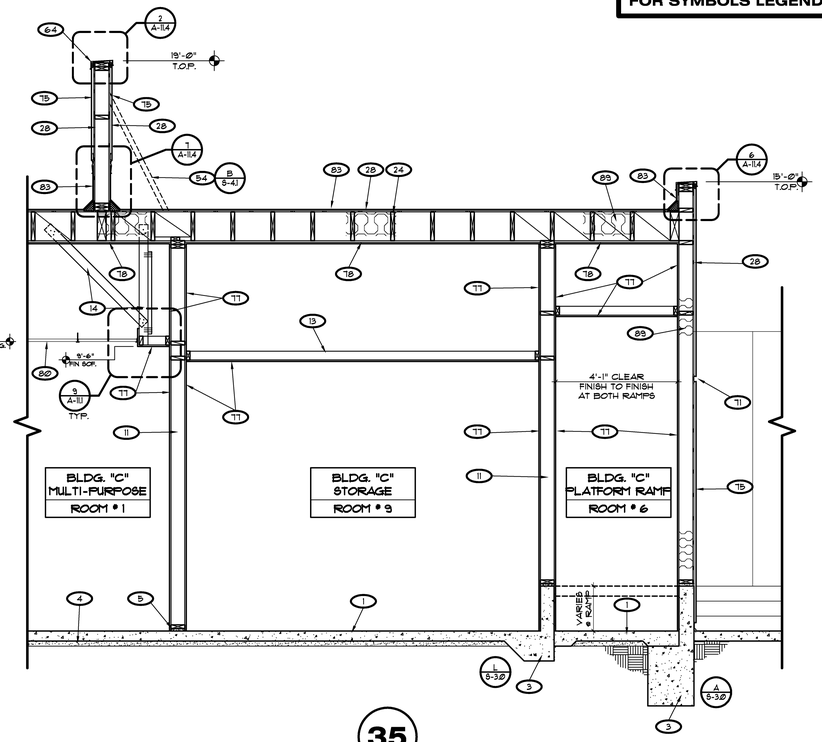

35

BLDG. SECT. E/A-C3
BLDG. "C"

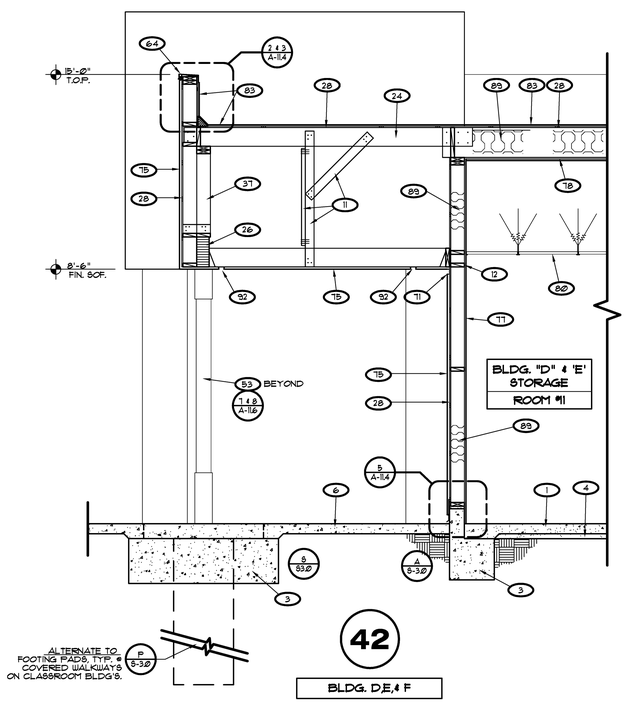

42

BLDG. D,E,& F

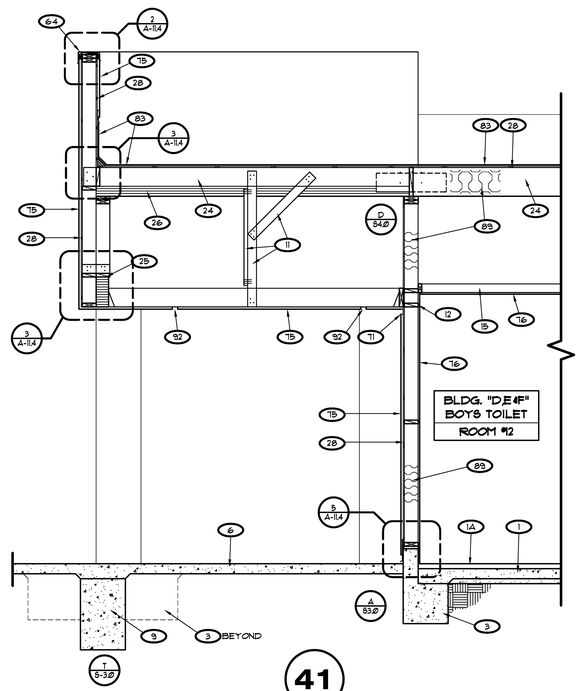

41

BLDG. SECT. C/A-DE3
C/A-F3
BLDG. D,E,& F

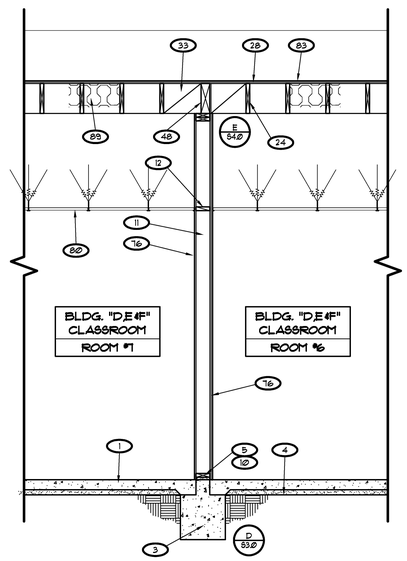

40

BLDG. SECT. C/A-DE3
C/A-F3
BLDG. D,E,& F

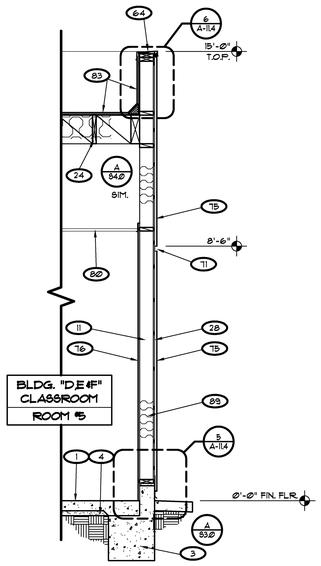

39

BLDG. SECT. C/A-DE3
C/A-F3
BLDG. D, E & F

LICENSED ARCHITECT
JAMES M. SHUMAN
C19098
RENEWAL 02/28/
STATE OF CALIFORNIA

REVISIONS	DATE
1	
2	
3	
4	
5	

P S W C GROUP
ARCHITECTS / PLANNERS
1887 BUSINESS CENTER DR., SUITE 3, SAN BERNARDINO, CA. 92408
909/890-2233 FAX. 909/890-2844

ROOSEVELT II
ELEMENTARY SCHOOL
SAN BERNARDINO CITY UNIFIED SCHOOL DISTRICT
1261 W. 14TH STREET, SAN BERNARDINO, CA.

WALL SECTIONS

SCALE: 1/8" = 1'-0"

JOB NO. P530
DRAWN BY
DATE 6/7/2011

A-7.7

RE-BID #F09-02 ROOSEVELT II (HENRY) E.S. NEW CONSTRUCTION BID ISSUANCE SET 12/09/11