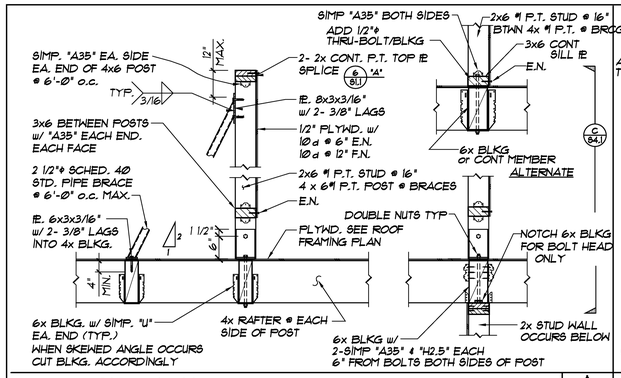

SECTION — SCALE: 3/4" = 1'-0" — A / S4.1

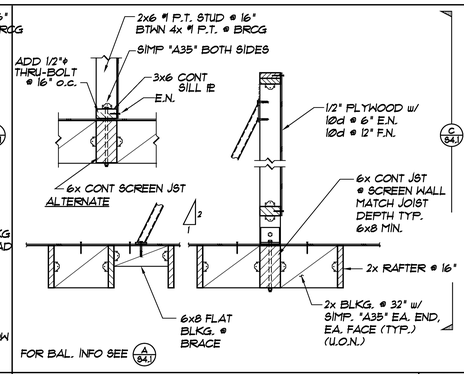

SECTION — SCALE: 3/4" = 1'-0" — B / S4.1

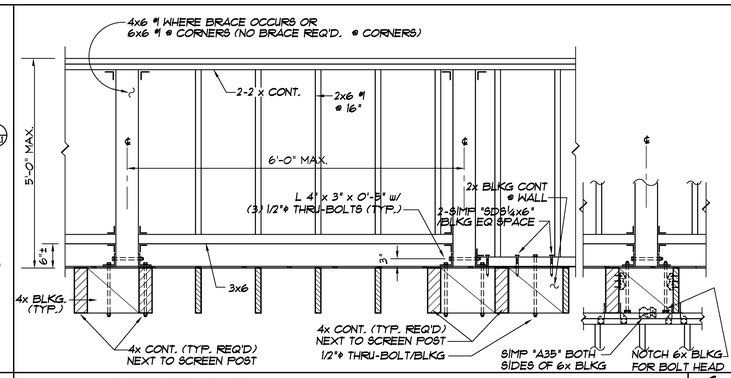

ELEVATION — SCALE: 3/4" = 1'-0" — C / S4.1

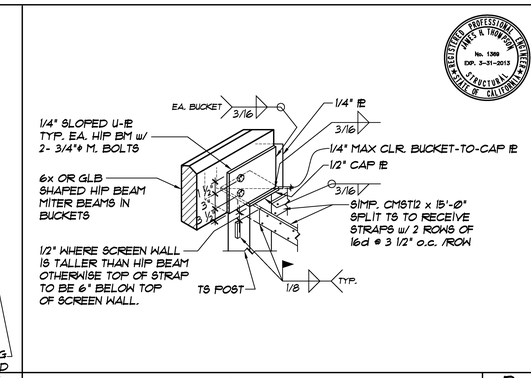

DETAIL — SCALE: 3/4" = 1'-0" — D / S4.1

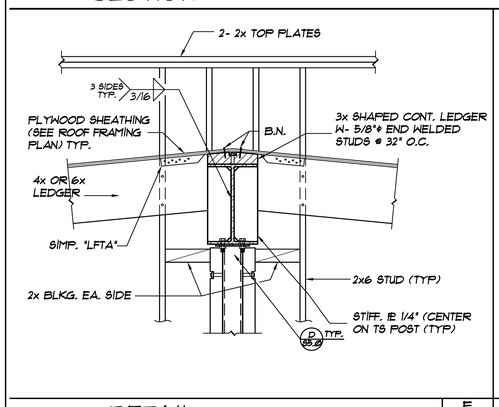

DETAIL — SCALE: 3/4" = 1'-0" — E / S4.1

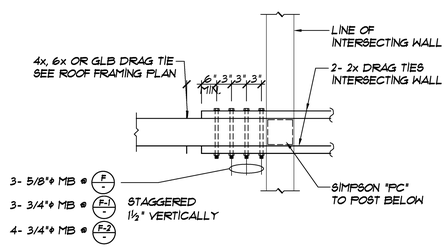

PLAN — SCALE: 1" = 1'-0" — F / S4.1

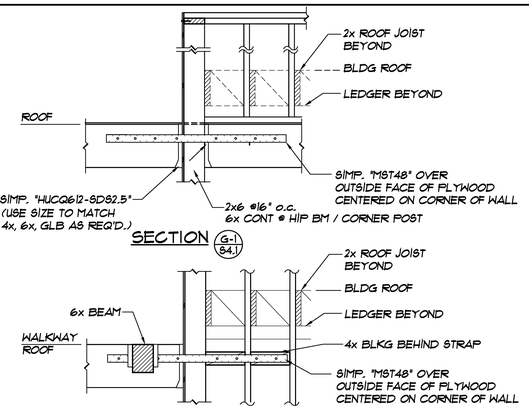

SECTION — SCALE: 1" = 1'-0" — G / S4.1

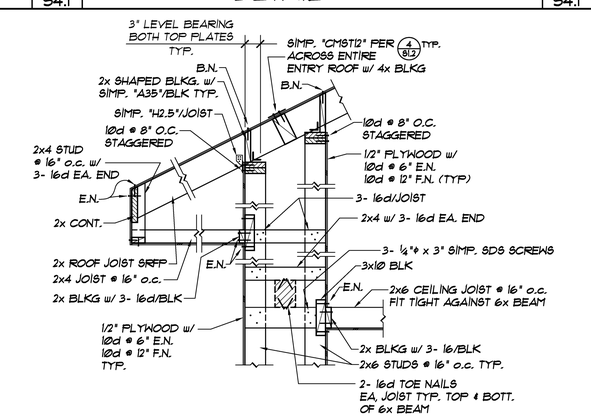

PLAN — SCALE: 3/4" = 1'-0" — H / S4.1

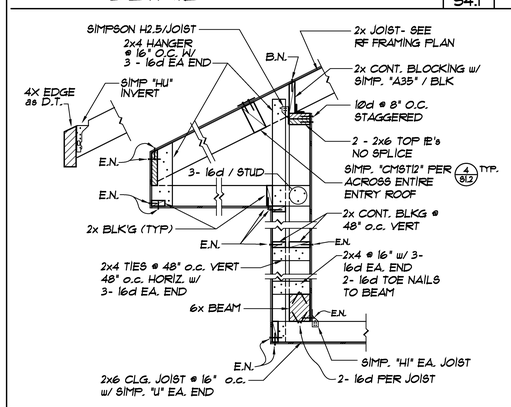

SECTION — SCALE: 3/4" = 1'-0" — J / S4.1

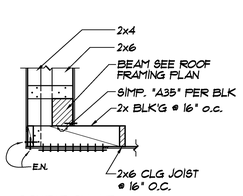

CONDITION AT PARALLEL CLG JOISTS

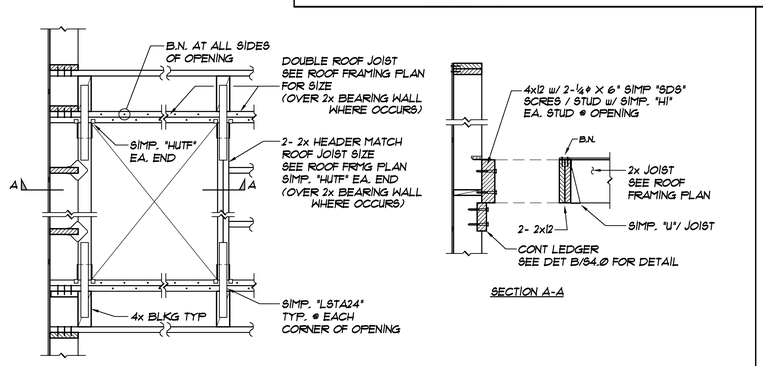

DETAIL — SCALE: 3/4" = 1'-0" — K / S4.1

NOT USED — SCALE: 3/4" = 1'-0" — L / S4.1

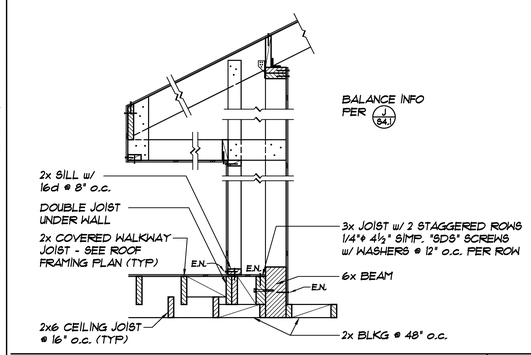

SECTION — SCALE: 3/4" = 1'-0" — M / S4.1

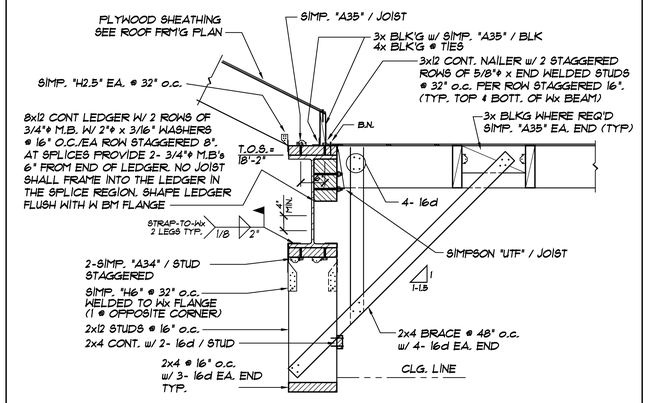

SECTION — SCALE: 3/4" = 1'-0" — N / S4.1

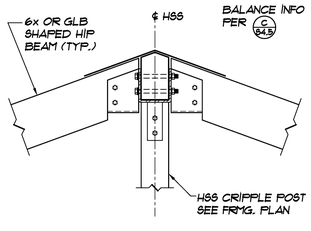

DETAIL — SCALE: 3/4" = 1'-0" — P / S4.1

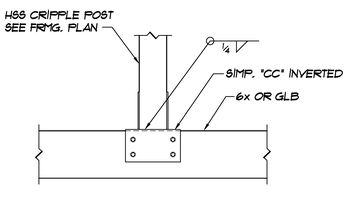

DETAIL — SCALE: 3/4" = 1'-0" — T / S4.1

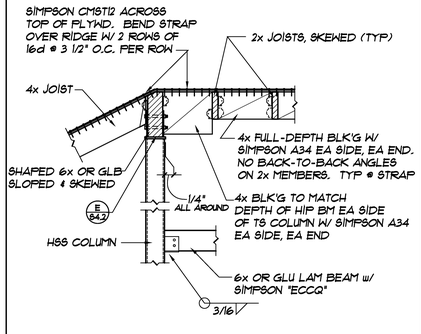

DETAIL — SCALE: 3/4" = 1'-0" — U / S4.1

Z:\CURRENT\SAN BERNARDINO SCHOOLS\14-0501 — ALESSANDRO & ROOSEVELT\ACAD\S4-1.dwg 12-07-11-9:37 AM

REGISTERED PROFESSIONAL ENGINEER — HANS W. THOMPSON — No. 1309 — EXP. 3-31-2013 — STRUCTURAL — STATE OF CALIFORNIA

LICENSED ARCHITECT — FRANCIS W. PSWC — C19098 — RENEWAL 06/08/13 — STATE OF CALIFORNIA

VERIFICATION STAMP — DIV. OF THE STATE ARCHITECT — OFFICE OF REGULATORY PROCEDURES — APPL. 04-107199 — FIS ____ SS ____ — AC. ____ DATE ____

THOMPSON & ASSOCIATES
STRUCTURAL ENGINEERS
8122 E. WALNUT STREET
PASADENA, CALIFORNIA 91107
PH (626)449-2970
FAX (626)449-4651

REVISIONS

P S W C GROUP
ARCHITECTS / PLANNERS
1867 BUSINESS CENTER DR., SUITE 3, SAN BERNARDINO, CA. 92408
909/890-2623 FAX. 909/890-2644

ROOSEVELT II
ELEMENTARY SCHOOL
SAN BERNARDINO CITY UNIFIED SCHOOL DISTRICT
1281 W. 16TH STREET, SAN BERNARDINO, CA.

SECTIONS & DETAILS

SCALE: AS NOTED

JOB NO. — DRAWN BY D.S.E. — DATE

S4.1

RE-BID #F09-02 ROOSEVELT II (HENRY) E.S. NEW CONSTRUCTION BID ISSUANCE SET 12/09/11