SEE SHEET A-7.1
FOR SYMBOLS LEGEND

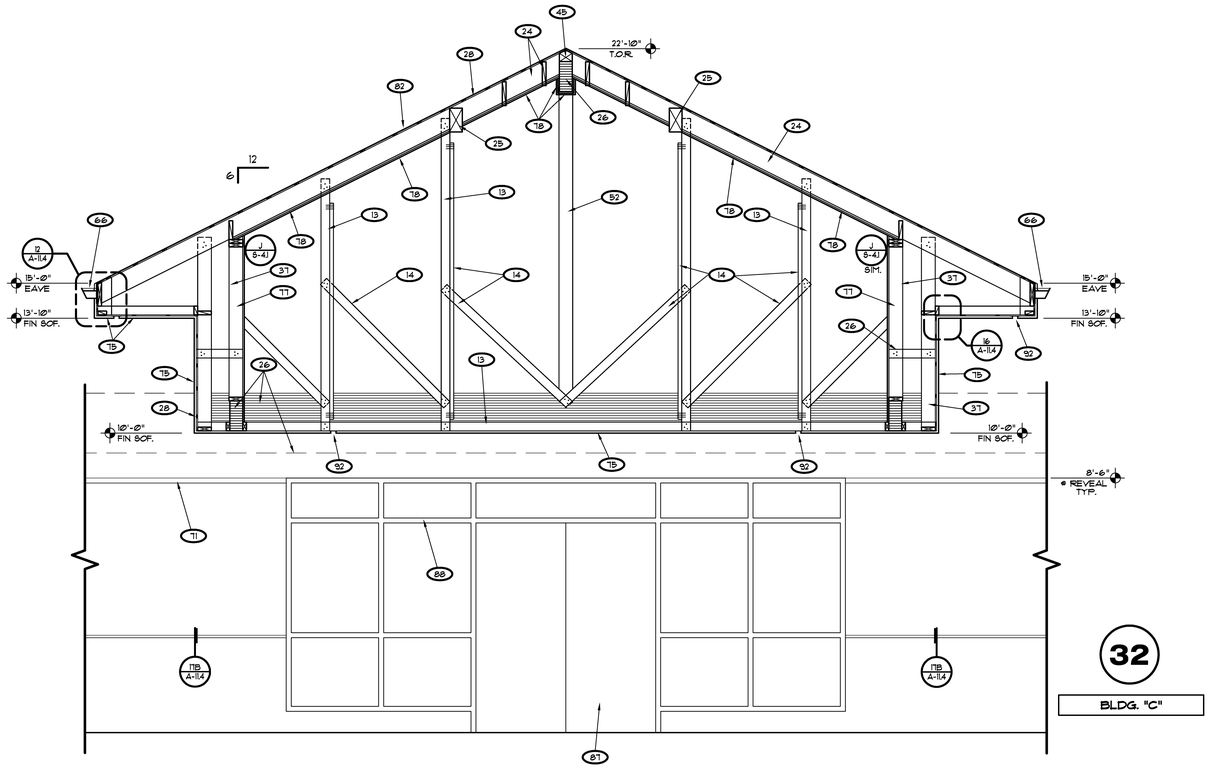

32
BLDG. "C"

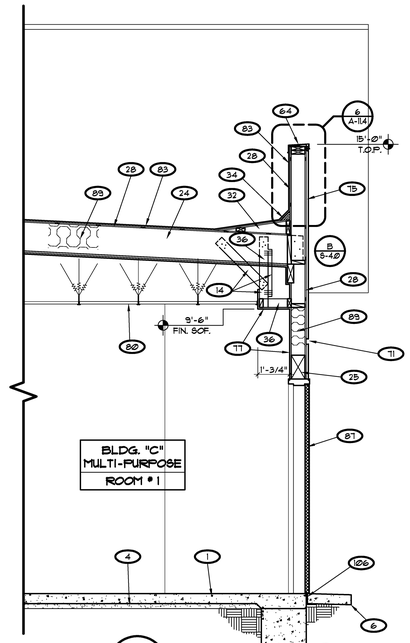

31
BLDG. SECT. C/A-C3
BLDG. "C"

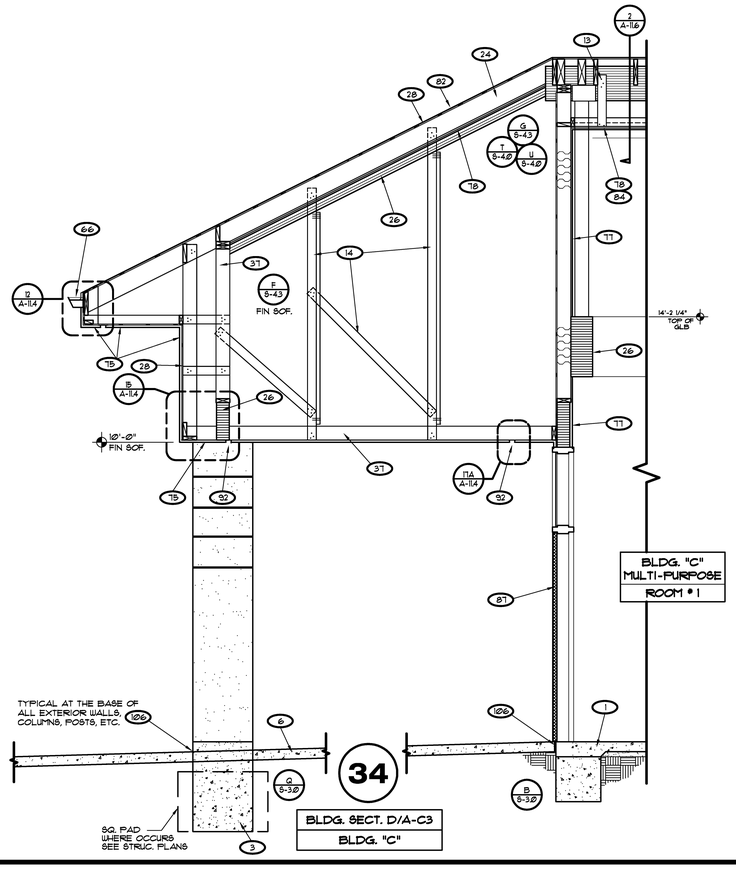

34
BLDG. SECT. D/A-C3
BLDG. "C"

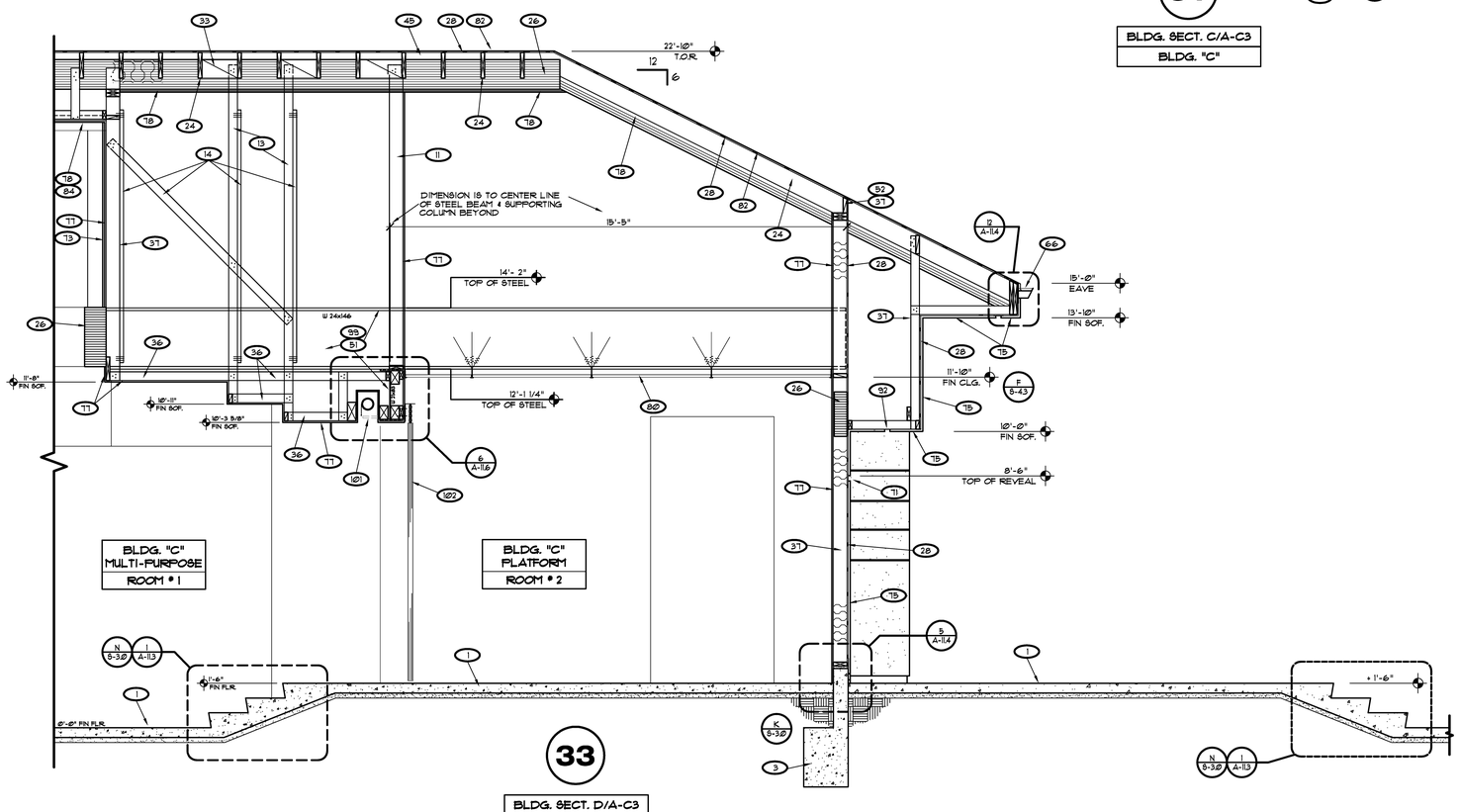

33
BLDG. SECT. D/A-C3
BLDG. "C"

LICENSED ARCHITECT
JAMES M. SHANNON
C19098
RENEWAL 02/28/
STATE OF CALIFORNIA

REVISIONS	DATE
1	

P S W C GROUP
ARCHITECTS / PLANNERS
1897 BUSINESS CENTER DR., SUITE 3, SAN BERNARDINO, CA. 92408
909/890-2223 FAX 909/890-2944

ROOSEVELT II
ELEMENTARY SCHOOL
SAN BERNARDINO CITY UNIFIED SCHOOL DISTRICT
1261 W. 16TH STREET, SAN BERNARDINO, CA.

WALL SECTIONS
SCALE: 1/8" = 1'-0"

JOB NO. F520
DRAWN BY
DATE 6/7/2011

A-7.6

RE-BID #F09-02 ROOSEVELT II (HENRY) E.S. NEW CONSTRUCTION BID ISSUANCE SET 12/09/11