NOTES:
1. TELEGRAPHING FROM FORM WORK SHALL NOT BE PERMITTED. SIGN SHALL BE PAINTED OR SEALED WITH A NATURAL LOOK. COLOR OR COLORS TO BE SELECTED BY THE ARCHITECT.
2. CONTRACTOR SHALL PROVIDE A SAMPLE SANDBLAST TEXTURE FOR THE APPROVAL OF THE ARCHITECT PRIOR TO ANY SANDBLASTING.
3. SMOOTH AREAS SHALL BE PATCHED & SACKED.
4. STREET ADDRESS TO BE VERIFIED BY THE G.C. AND APPROVED BY THE ARCHITECT / DISTRICT PRIOR TO FARICATION. LETTERS TO BE 3 1/2" W. x 4" H. x 3/4" DEEP LETTERS. (@ BOTH ENDS)

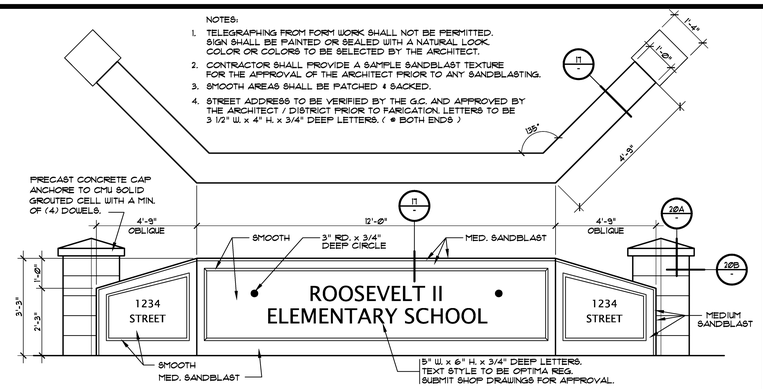

16 SCHOOL SIGN PLAN & ELEVATION 1/2"=1'-0"

12 NOT USED

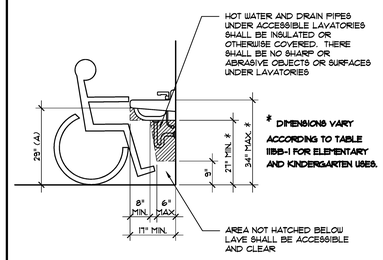

8 TOE/KNEE CLEARANCE DTL. N.T.S.

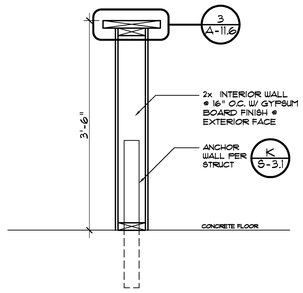

5 PONY WALL 1"=1'-0"

NOTE: WARNING STRIPS SHALL BE OF A NON-SLIP MATERIAL, WITH MIN. 10% CONTRASTING COLOR TYP. AND SHALL BE LOCATED @ ALL TREADS AND @ TOP LANDING AS SHOWN.

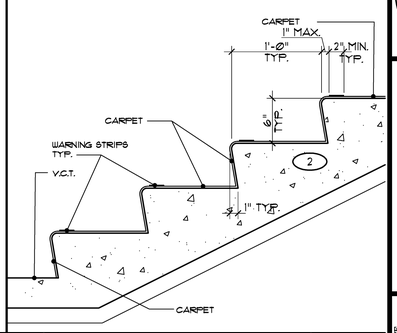

1 2" WARNING STRIP 3"=1'-0"

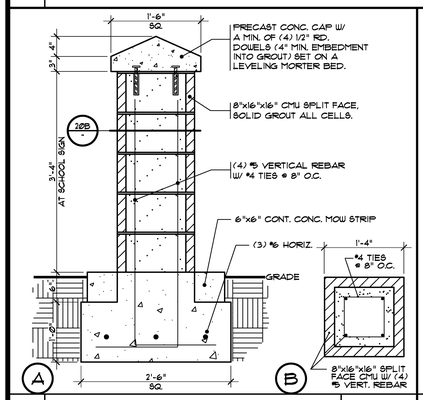

20 SECTIONS AT PILASTER 1"=1'-0"

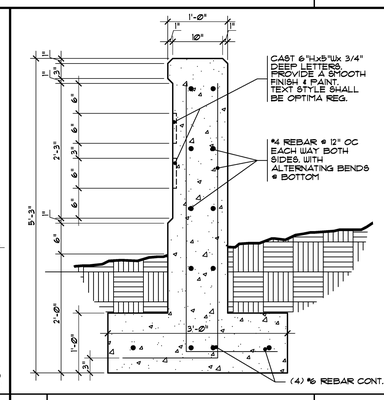

17 SECTION AT SIGN 1"=1'-0"

NOTE: FAUCET CONTROLS & OPERATING MECHANISMS SHALL BE OPERABLE WITH ONE HAND AND SHALL NOT REQUIRE TIGHT GRASPING, PINCHING, OR TWISTING OF THE WRIST. THE FORCE REQUIRED TO ACTIVATE CONTROLS SHALL NO MORE THAN 5lbs. LEVER OPERATED, PUSH TYPE & ELECTR- ONICALLY CONTROLLED MECHANISMS ARE ACCEPTABLE. SELF CLOSING VALVES ARE ALLOWED IF THE FAUCET REMAINS OPEN FOR AT LEAST 10 SECONDS.

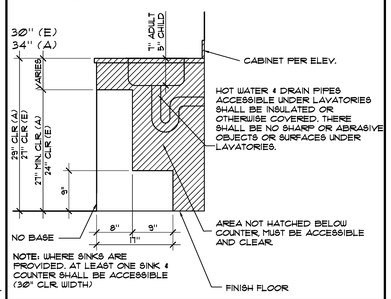

NOTE: WHERE SINKS ARE PROVIDED, AT LEAST ONE SINK & COUNTER SHALL BE ACCESSIBLE (30" CLR. WIDTH)

13 ACCESSIBLE SINK 1"=1'-0"

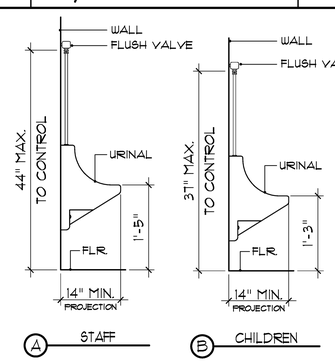

9 ACCESSIBLE URINAL 3/4"=1'-0"

6 NOT USED

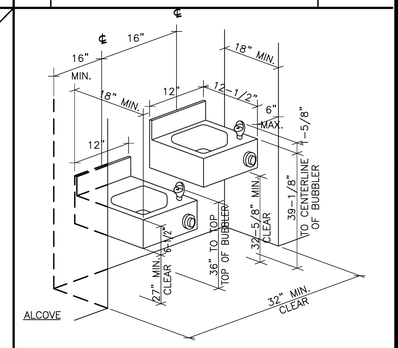

NOTE:
PROVIDE (3) 4x4 WD. STUDS, AND (6) 3/8" @ M.B. W/ NUTS & WASHERS FOR MANUF.'S 3/16" THICK STL. MOUNTING PLATE.

2 TYP. DRINKING FOUNTAIN 1/2"=1'-0"

UL DESIGN NO. X842
RATINGS - 3/4, 1 AND 1-1/2 HR. (SEE ITEM 2)

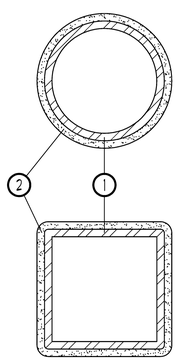

STEEL COLUMN: SQUARE, RECTANGULAR OR CIRCULAR TUBULAR STEEL COLUMNS WITH THE MIN. SIZES SHOWN ON THE TABLE BELOW. STEEL COLUMNS SHALL BE FREE OF DIRT, LOOSE SCALE AND OIL.

MASTIC COATING: COATING APPLIED IN ACCORDANCE WITH MANUFACTURER'S INSTRUCTIONS TO THE MIN. DRY FILM THICKNESS SHOWN BELOW.

RATING, HR.	STEEL COLUMN SIZE	COLUMN A/P	REQUIRED MIN. THICKNESS, IN.
3/4	SP 4" DIA. X 3/16"	Ø.18	Ø.1Ø2
3/4	ST 5 X 3 X 1/4"	Ø.22	Ø.13Ø
3/4	ST 8 X 6 X 5/16"	Ø.29	Ø.Ø65
3/4	ST 12 X 10 X 1/2"	Ø.46	Ø.235
1	ST 5 X 3 X 5/16"	Ø.27	Ø.13Ø
1	ST 12 X 12 X 1/2"	Ø.47	Ø.Ø45
1	SP 10" DIA. X 5/16"	Ø.3Ø	Ø.11
1-1/2	SP 10" DIA. X 5/16"	Ø.3Ø	Ø.13Ø
1-1/2	ST 12 X 12 X 1/2"	Ø.47	Ø.Ø95

A/D FIRE PROTECTION SYSTEMS INC. - TYPE "A/D FIREFILM II", INVESTIGATED FOR GENERAL PURPOSE.

TOP COAT: (NOT SHOWN) - FINISHING TOPCOAT, TYPE "A/D COLORCOAT" APPLIED AT AN APPROXIMATE Ø.Ø02" DRY FILM THICKNESS.

* BEARING THE UL CLASSIFICATION MARK

23 DETAIL N.T.S.

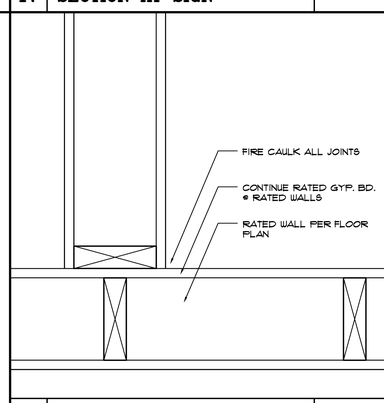

18 1-HOUR WALL INTERSECTION 3"=1'-0"

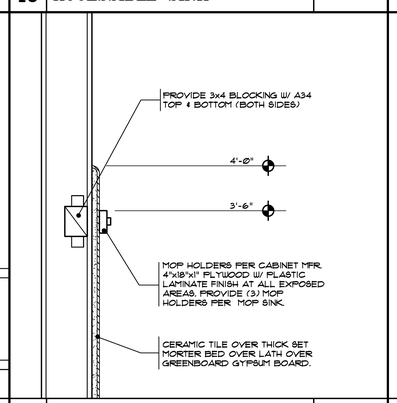

14 MOP RACK 1 1/2"=1'-0"

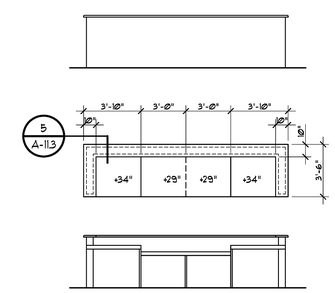

NOTE:
SEE 11/A-11.2 & 5/A-11.3 FOR ANCORAGE DETAILS.

10 REAR MEDIA DESK 1/4"=1'-0"

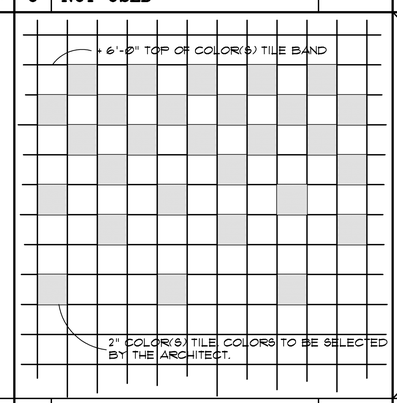

7 TILE COLOR BAND 3"=1'-0"

3 NOT USED

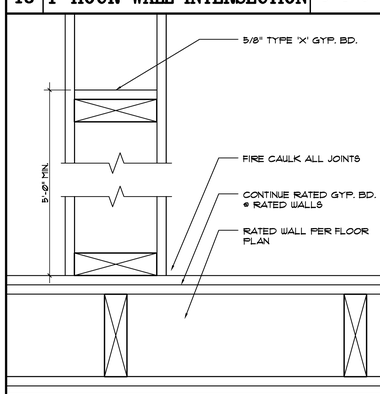

19 2-HOUR WALL INTERSECTION 3"=1'-0"

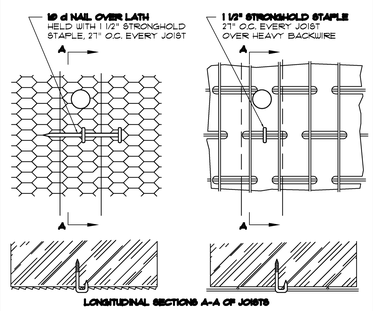

15 SOFFIT PLASTER ATTACHMENT 1 1/2"=1'-0"

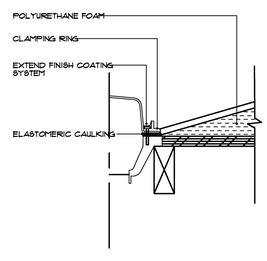

11 DETAIL 3"=1'-0"

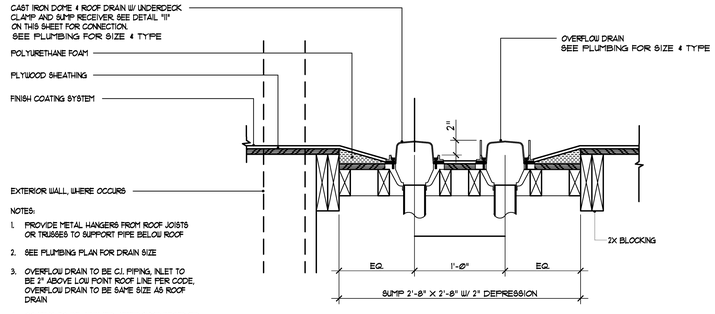

NOTES:
1. PROVIDE METAL HANGERS FROM ROOF JOISTS OR TRUSSES TO SUPPORT PIPE BELOW ROOF
2. SEE PLUMBING PLAN FOR DRAIN SIZE
3. OVERFLOW DRAIN TO BE CI. PIPING, INLET TO BE 2" ABOVE LOW POINT ROOF LINE PER CODE, OVERFLOW DRAIN TO BE SAME SIZE AS ROOF DRAIN
4. COATING TO BE APPLIED AFTER SUMP RECEIVER INSTALLED
5. SEE STRUCTURAL DETAILS FOR ADDITIONAL FRAMING REQUIREMENTS

4 ROOF DRAIN & OVERFLOW DETAIL 1 1/2"=1'-0"

LICENSED ARCHITECT JAMES M. SHIMON C19096 RENEWAL 12/29/ STATE OF CALIFORNIA

DATE | REVISIONS

P S W C GROUP
ARCHITECTS / PLANNERS
1887 BUSINESS CENTER DR., SUITE 3, SAN BERNARDINO, CA. 92408
909/890-2233 FAX. 909/890-2844

ROOSEVELT II ELEMENTARY SCHOOL
SAN BERNARDINO CITY UNIFIED SCHOOL DISTRICT
1361 W. 16TH STREET, SAN BERNARDINO, CA.

MISC. DETAILS

SCALE: AS SHOWN

JOB NO. P5301 | DRAWN BY | DATE 6/7/2011

A-11.3

RE-BID #F09-02 ROOSEVELT II (HENRY) E.S. NEW CONSTRUCTION BID ISSUANCE SET 12/09/11