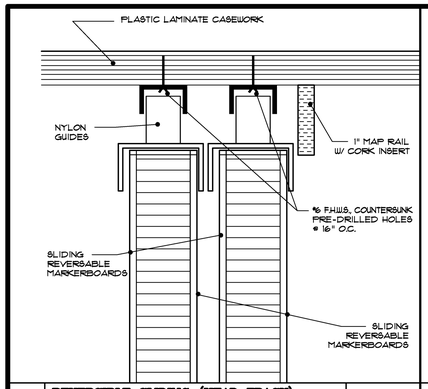

19 REVERSIBLE SLIDING (HEAD TRACK) @ MARKER / CHALK BOARD 1"=1'-0"

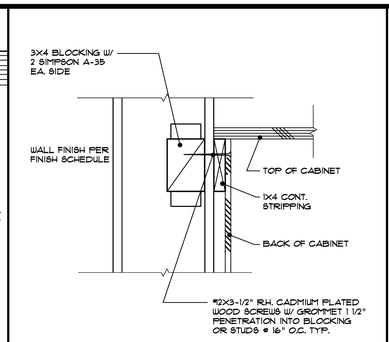

15 CABINET DETAIL 3"=1'-0"

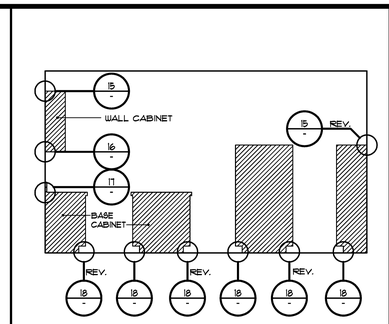

11 CABINET ANCHORAGE KEY N.T.S.

ROOF CONSTRUCTION TIMBER FRAMING @ 24" MAX. O.C. W/ 1/2" (MIN.) WOOD STRUCTURAL PANELS W/ EXTERIOR GLUE APPLIED @ RIGHT ANGLES TO TOP OF JOIST OR TRUSS W/ 8d NAILS, THE WOOD STRUCT. PANEL THICKNESS SHALL NOT BE LESS THAN 1/2" NOR LESS THAN REQ'D. BY CH. 23

CEILING CONSTRUCTION BASE LAYER 5/8" TYPE X GYPSUM WALLBOARD APPLIED @ RIGHT ANGLES TO JOIST OR TRUSS @ 24" O.C. W/ 1 1/4" TYPE S OR TYPE W DRYWALL SCREWS @ 24" O.C. FACE LAYER 5/8" TYPE X GYPSUM WALLBOARD OR VENEER BASE APPLIED @ RIGHT ANGLES TO JOIST OR TRUSS THROUGH BASE LAYER W/ 1 7/8" TYPE S OR TYPE W DRYWALL SCREWS @ 12" O.C. @ JOIST AND INTERMEDIATE JOIST OR TRUSS. FACE LAYER JOISTS OFFSET 24" FROM BASE LAYER JOINTS, 1 1/2" TYPE G DRYWALL SCREWS PLACED 2" BACK ON EITHER SIDE OF FACE LAYER END JOINTS, 12" O.C.

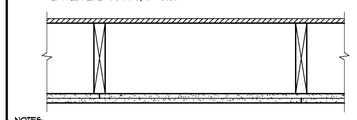

NOTES:
1. ALL ROOF MEMBERS / BEAMS AND SUPPORTING MEMBERS SHALL BE PROTECTED AS NOTED ABOVE, REFER TO CROSS SECTIONS AND WALL SECTIONS FOR CLARIFICATIONS.
2. ALL COLUMN CAPS @ WOOD / STEEL POST SUPPORTING BEAMS SHALL BE PROTECTED IN THE SAME MANNER AS ROOF ASSEMBLY

ROOF / CEILING ASSEMBLY PER 21-1.1 - CBC TABLE 7-C
1 HOUR RATING

7 ONE HOUR RATED CEILING N.T.S.

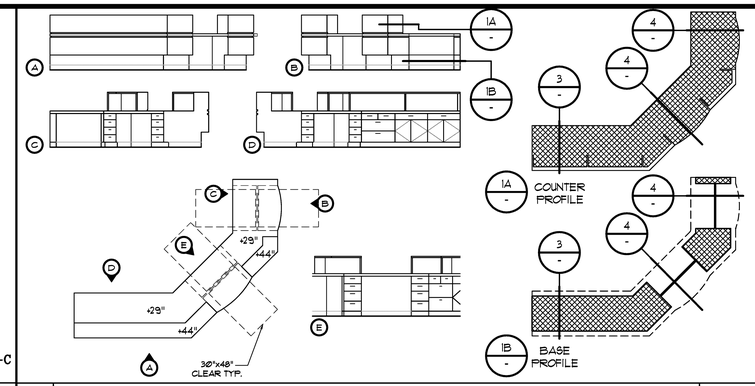

1 RECEPTION DESK 1/4"=1'-0"

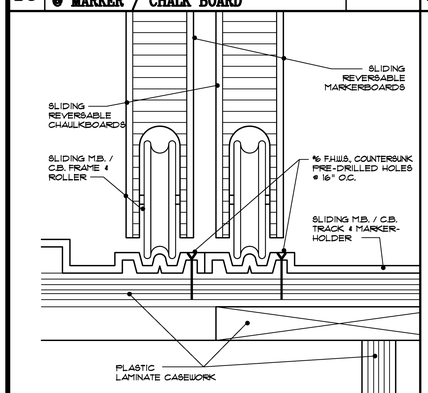

20 REVERSIBLE SLIDING (TRACK) @ MARKER / CHALK BOARD 1"=1'-0"

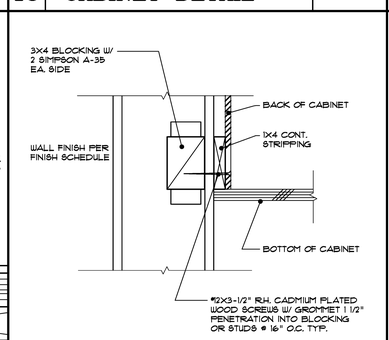

16 CABINET DETAIL 3"=1'-0"

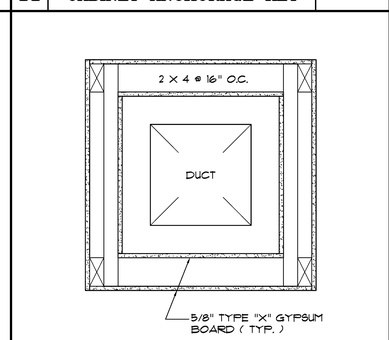

12 ONE HOUR DUCT SHAFT N.T.S.

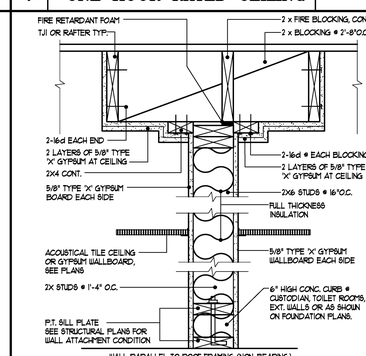

INTERIOR WALLS PER 17-1.3 - CBC CH. 7B
1 HOUR RATING

8 1 HR. WALL UL. NO. U305 1 1/2"=1'-0"

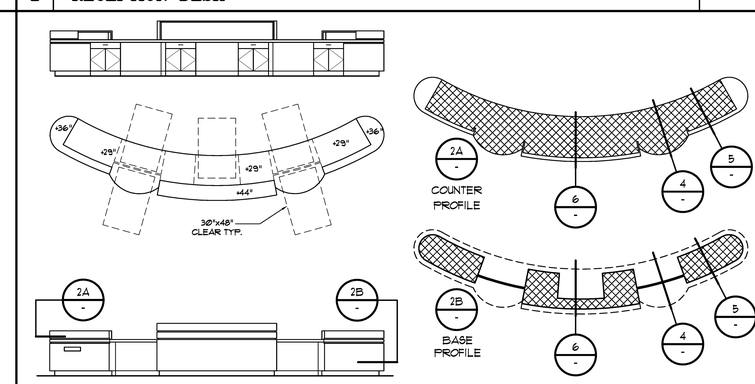

2 FRONT MEDIA DESK 1/4"=1'-0"

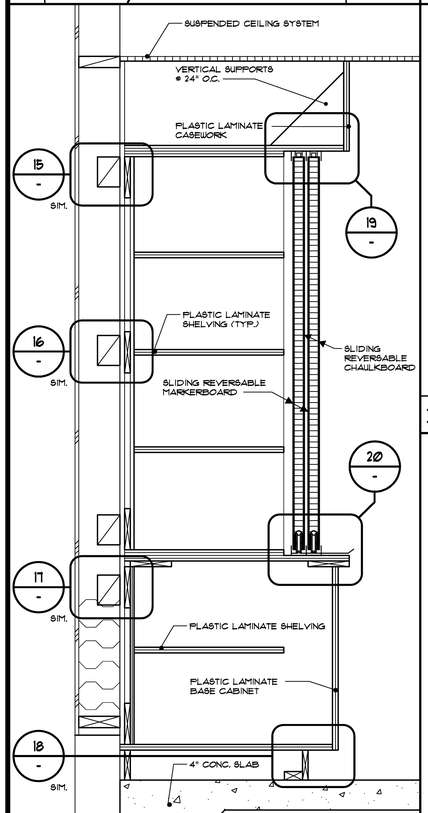

21 REVERSIBLE SLIDING MARKER / CHALK BOARD 1 1/2"=1'-0"

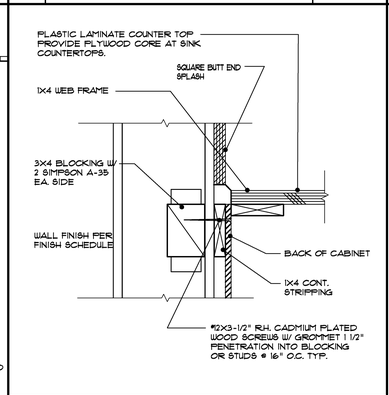

17 CABINET DETAIL 3"=1'-0"

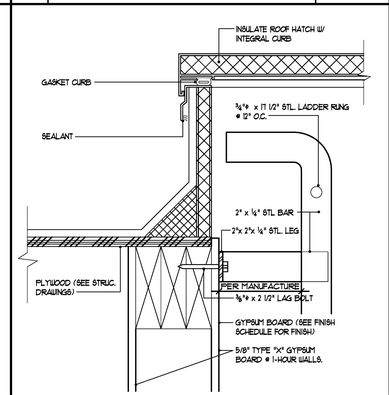

13 ACCESS LADDER 3"=1'-0"

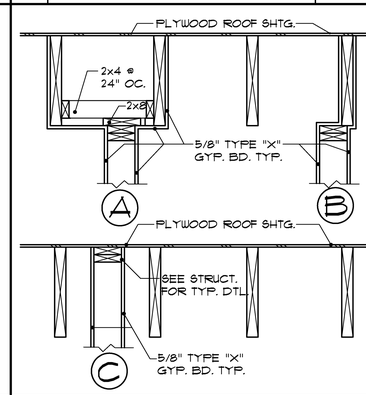

9 1-HOUR DETAILS UL# U305 1"=1'-0"

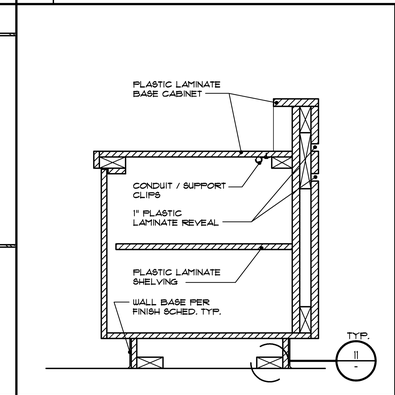

5 MEDIA DESK DETAIL 1 1/2"=1'-0"

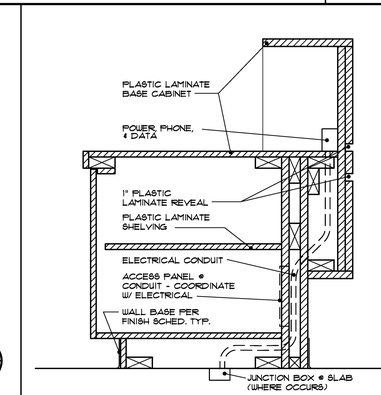

3 RECEP. DESK DETAIL 1 1/2"=1'-0"

18 CABINET DETAIL 3"=1'-0"

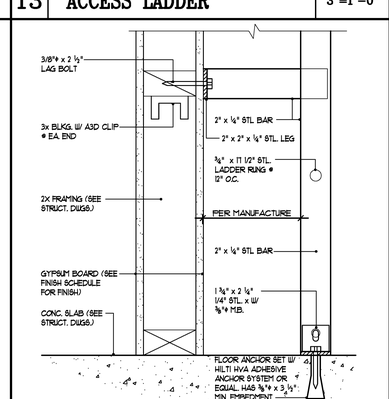

14 ACCESS LADDER 3"=1'-0"

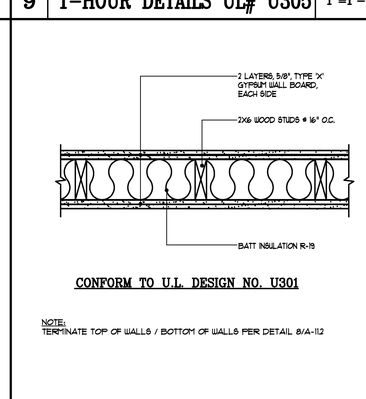

CONFORM TO U.L. DESIGN NO. U301

NOTE:
TERMINATE TOP OF WALLS / BOTTOM OF WALLS PER DETAIL 8/A-112

10 2-HOUR FIRE RATED WALL 1 1/2"=1'-0"

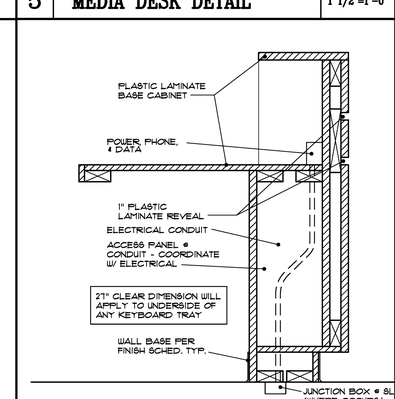

6 MEDIA DESK DETAIL 1 1/2"=1'-0"

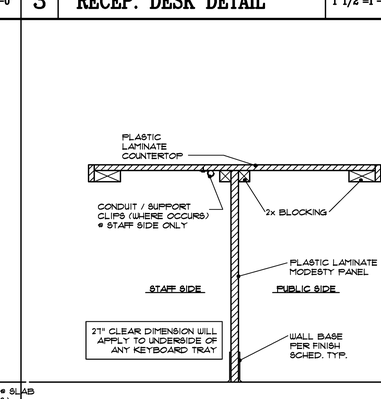

4 RECEP. DESK DETAIL 1 1/2"=1'-0"

LICENSED ARCHITECT JAMES M. SHIVERS C19098 RENEWAL 02/29/ STATE OF CALIFORNIA

DATE
REVISIONS

P S W C GROUP
ARCHITECTS / PLANNERS
1867 BUSINESS CENTER DR., SUITE 3, SAN BERNARDINO, CA. 92408
909/890-2233 FAX. 909/890-2844

ROOSEVELT II ELEMENTARY SCHOOL
SAN BERNARDINO CITY UNIFIED SCHOOL DISTRICT
1261 W. 16TH STREET, SAN BERNARDINO, CA.

MISC. DETAILS

SCALE: AS SHOWN

JOB NO. PS20
DRAWN BY
DATE 9/7/2011

A-11.2

RE-BID #F09-02 ROOSEVELT II (HENRY) E.S. NEW CONSTRUCTION BID ISSUANCE SET 12/09/11