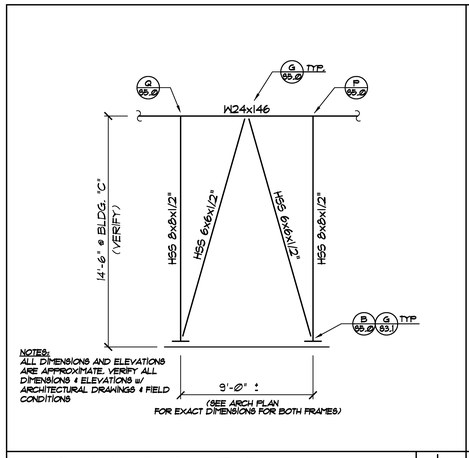

FRAME ELEVATION SCALE: 1/4" = 1'-0" 1 S5.0

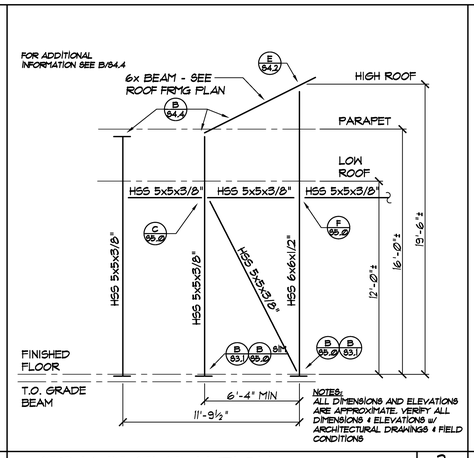

FRAME ELEVATION SCALE: 1/4" = 1'-0" 2 S5.0

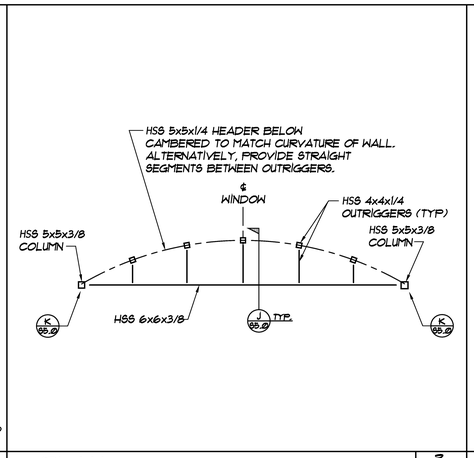

PLAN SCALE: NONE 3 S5.0

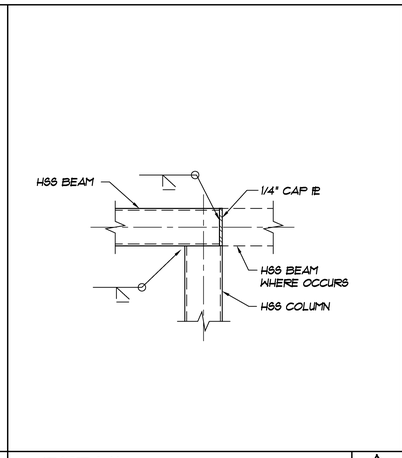

DETAIL SCALE: 1 1/2" = 1'-0" A S5.0

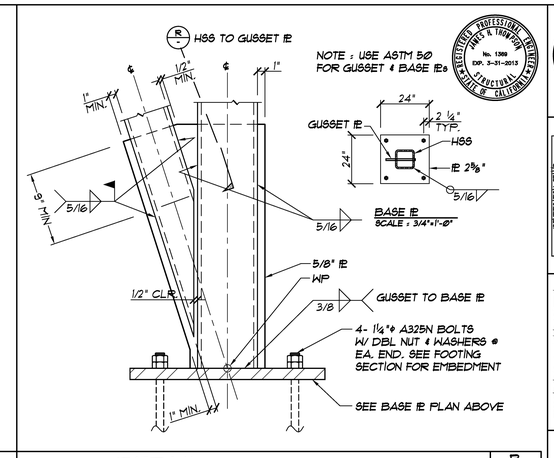

DETAIL SCALE: 1 1/2" = 1'-0" B S5.0

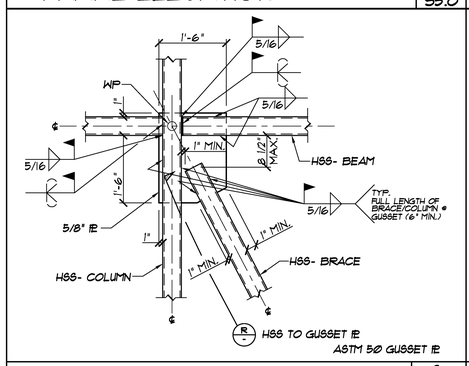

DETAIL SCALE: 1 1/2" = 1'-0" C S5.0

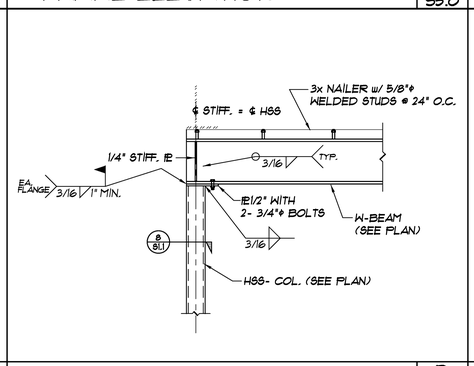

DETAIL SCALE: 3/4" = 1'-0" D S5.0

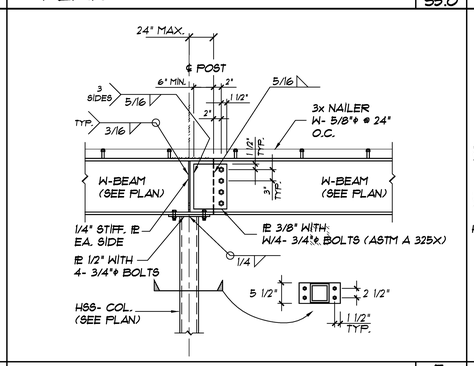

DETAIL SCALE: 3/4" = 1'-0" E S5.0

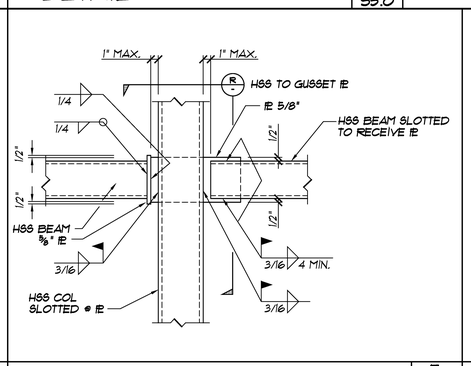

DETAIL SCALE: 1 1/2" = 1'-0" F S5.0

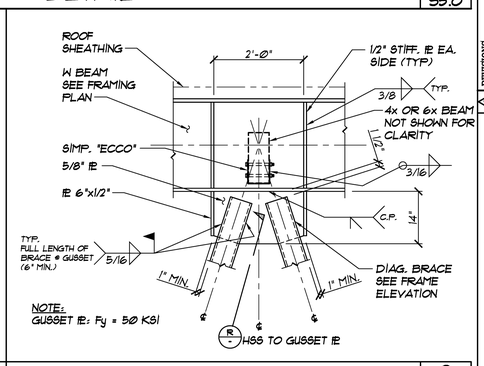

SECTION SCALE: 3/4" = 1'-0" G S5.0

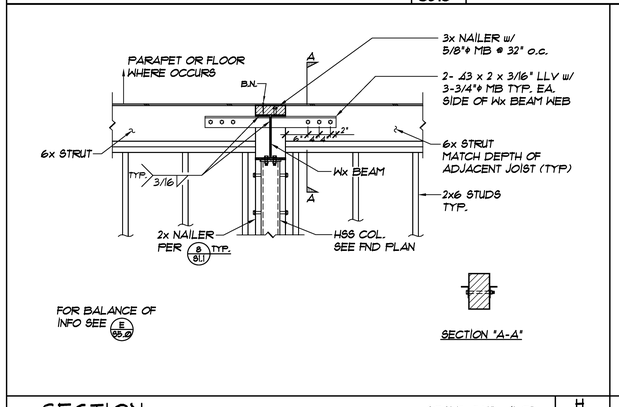

SECTION SCALE: 3/4" = 1'-0" H S5.0

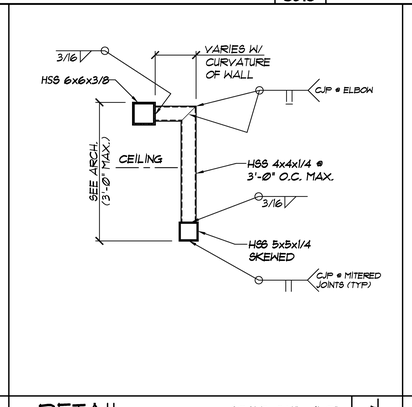

DETAIL SCALE: 3/4" = 1'-0" J S5.0

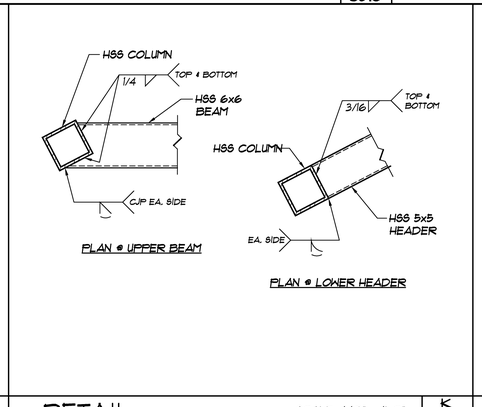

DETAIL SCALE: 1 1/2" = 1'-0" K S5.0

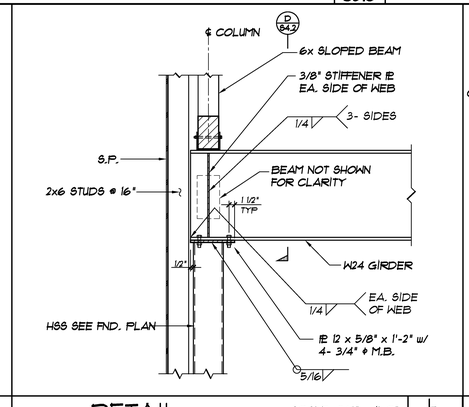

DETAIL SCALE: 3/4" = 1'-0" L S5.0

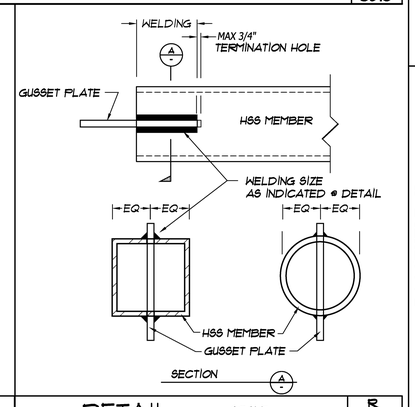

DETAIL SCALE: none R S5.0

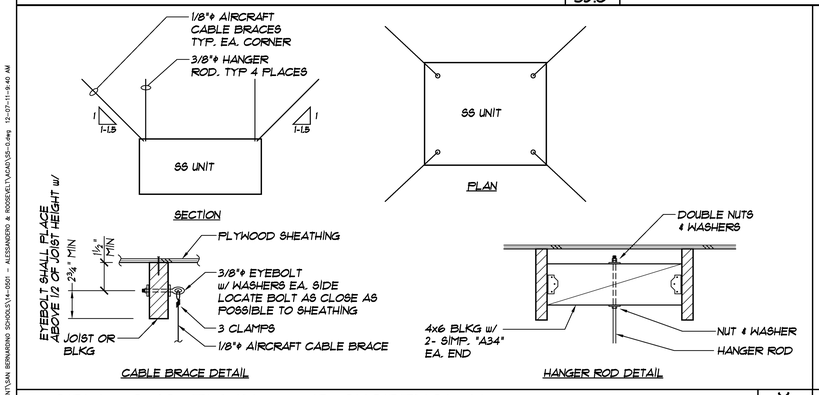

SPLIT SYSTEM INDOOR SUSPENSION SCALE: NONE M S5.0

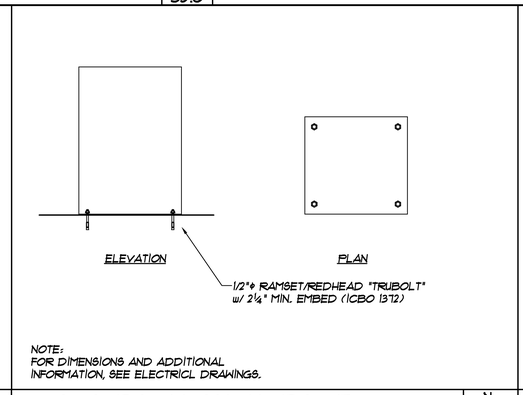

DATA RACK ANCHORAGE SCALE: NONE N S5.0

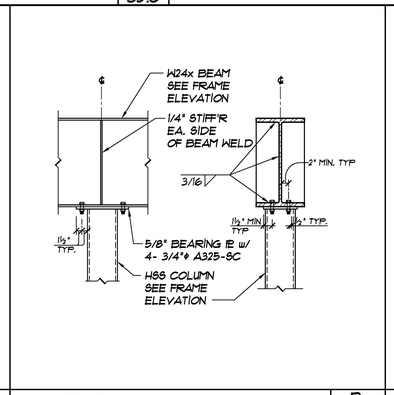

DETAIL SCALE: 3/4" = 1'-0" P S5.0

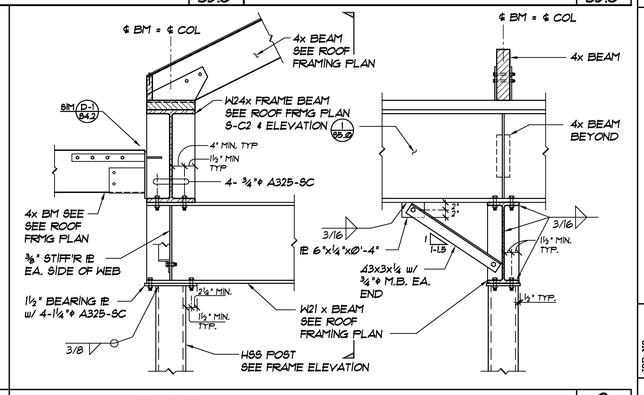

DETAIL SCALE: 3/4" = 1'-0" Q S5.0

REVISIONS

P S W C GROUP
ARCHITECTS / PLANNERS
1867 BUSINESS CENTER DR., SUITE 9, SAN BERNARDINO, CA. 92408
909/890-2253 FAX. 909/890-2844

ROOSEVELT II ELEMENTARY SCHOOL
SAN BERNARDINO CITY UNIFIED SCHOOL DISTRICT
1281 W. 16TH STREET, SAN BERNARDINO, CA.

SECTIONS & DETAILS
SCALE: AS NOTED

JOB NO.
DRAWN BY F.R.
DATE

S5.0

Z:\CURRENT\SAN BERNARDINO SCHOOLS\14-5501 - ALESSANDRO & ROOSEVELT\ACAD\S5-0.dwg 12-07-11-8:40 AM

RE-BID #F09-02 ROOSEVELT II (HENRY) E.S. NEW CONSTRUCTION BID ISSUANCE SET 12/09/11