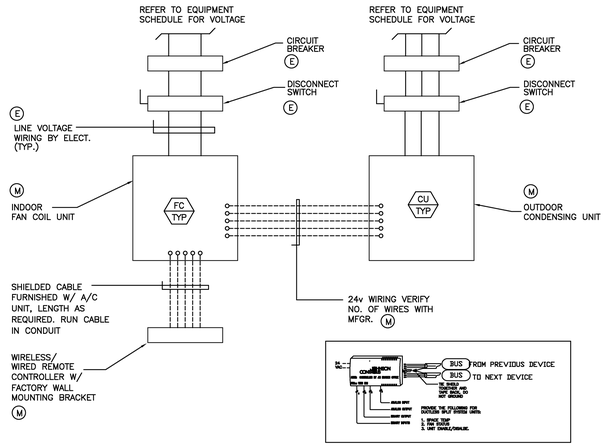

SPLIT SYSTEM WIRING SCHEMATIC | SCALE NONE | 5

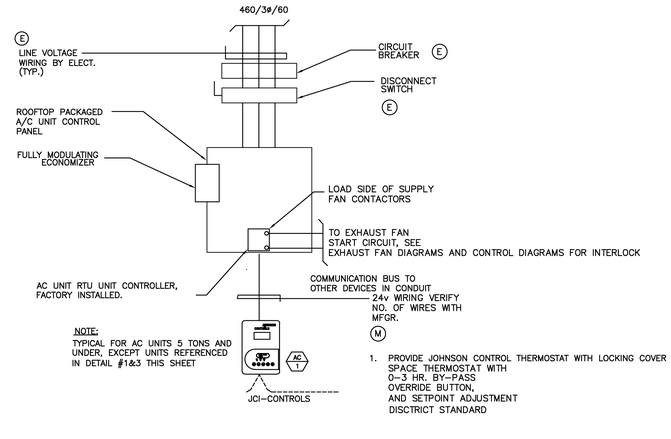

AIR COND. UNIT WIRING SCHEMATIC | SCALE NONE | 4

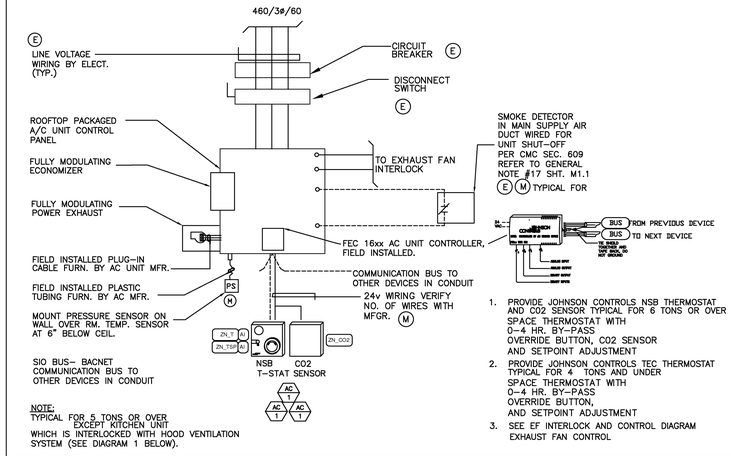

AIR COND. UNIT WIRING SCHEMATIC | SCALE NONE | 3

1. ALL CONTROLS SHALL BE INSTALLED AND PROVIDED BY JOHNSON CONTROLS INC, MAIN BRANCH ONLY. NO DISTRIBUTION, OR CONTROLS PROVIDER WITHOUT THE WRITTEN CONCENT BY JOHNSON CONTROLS INC. TO PROVIDE AND INSTALL ALL JCI CONTROLS. CONTACT MAHER SYADA, PE FOR QUALIFICATIONS AT 626-255-6406 MAIN BRANCH JCI BRANCH.
2. CONTROL SCHEMATICS ARE FOR SEQUENCE ONLY. REFER TO ELECTRICAL DRAWINGS AND SPECIFICATIONS FOR ALL ELECTRICAL DEVICES REQUIRED.
3. ALL AIR CONDITIONING UNIT SUPPLY FANS SHALL BE WIRED FOR CONSTANT BLOWER OPERATION.
4. ALL LOW VOLTAGE WIRING, INCLUDING FINAL CONNECTIONS TO CONTROL DEVICES AND EQUIPMENT, SHALL BE AS INDICATED ON THE MECHANICAL DRAWINGS OR SPECIFIED IN THE MECHANICAL SECTIONS OF THE SPECIFICATIONS. ALL LOW VOLTAGE WIRING SHALL BE A MINIMUM OF FOURTEEN (18) GAUGE.
5. ALL LOW VOLTAGE WIRING SHALL BE INSTALLED IN CONDUIT. ALL CONDUIT FOR LINE AND LOW VOLTAGE WIRING AND ALL LINE VOLTAGE WIRING, INCLUDING FINAL CONNECTIONS, SHALL BE AS INDICATED ON THE ELECTRICAL DRAWINGS AND/OR SPECIFIED IN THE ELECTRICAL SECTION OF THE SPECIFICATIONS.
6. ALL ELECTRICAL WORK SHALL BE INSTALLED IN ACCORDANCE WITH ALL APPLICABLE CODES AND REGULATIONS OF ALL GOVERNING BODIES HAVING JURISDICTION THEREOF.
7. (E) INDICATES ITEMS INDICATED ON THE ELECTRICAL DRAWINGS OR SPECIFIED IN THE ELECTRICAL SECTIONS OF THE SPECIFICATIONS.
8. (M) INDICATES ITEMS INDICATED ON THE MECHANICAL DRAWINGS OR SPECIFIED IN THE MECHANICAL SECTIONS OF THE SPECIFICATIONS.
9. ALL THERMOSTATS SHALL BE OF THE AUTOMATIC CHANGEOVER TYPE TO SEQUENCE HEATING OR COOLING. SET POINT RANGE SHALL BE 10°F. BETWEEN FULL HEATING AND COOLING. ADJUSTABLE TEMPERATURE DIFFERENTIAL SHALL BE 1-1/2°F. CONTROL LIMITS SHALL BE FROM 55°F. TO 85°F. SEE THERMOSTAT MOUNTING DETAIL.

CONTROL NOTES | SCALE NONE | 4

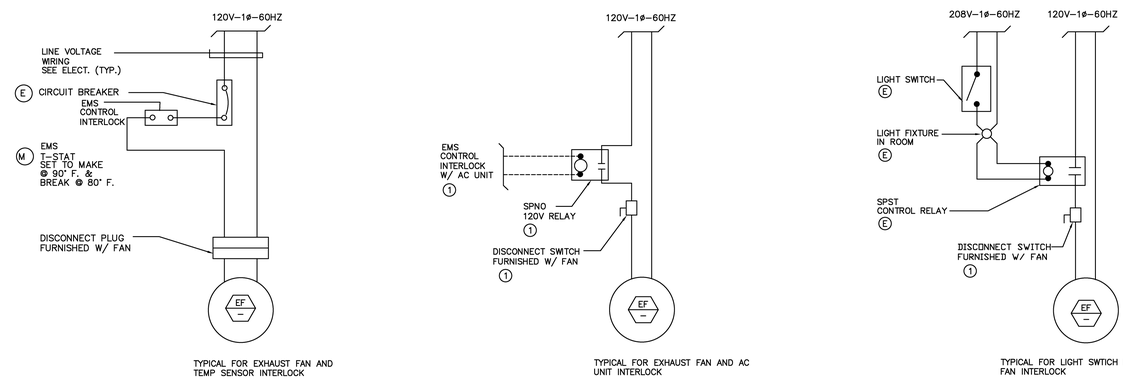

EXHAUST FAN WIRING SCHEMATICS | SCALE NONE | 2

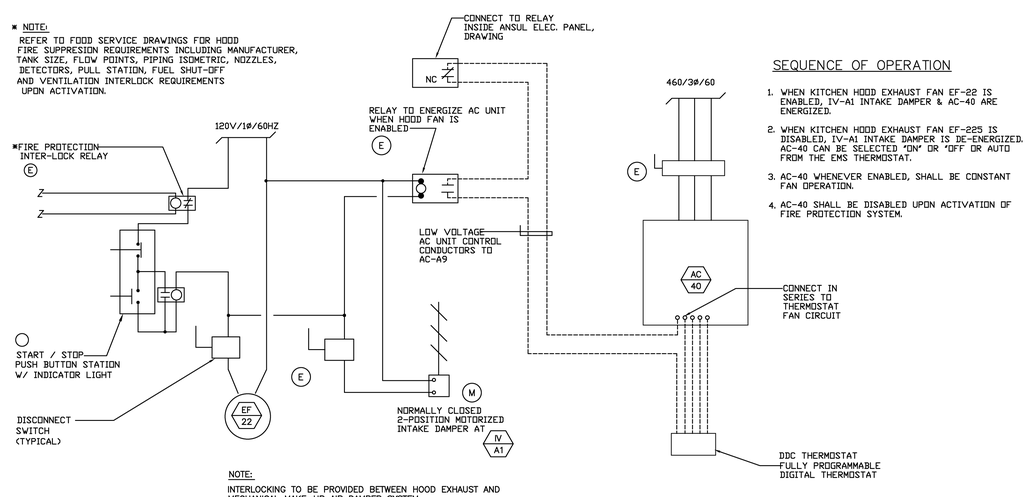

SEQUENCE OF OPERATION

1. WHEN KITCHEN HOOD EXHAUST FAN EF-22 IS ENABLED, IV-A1 INTAKE DAMPER & AC-40 ARE ENERGIZED.
2. WHEN KITCHEN HOOD EXHAUST FAN EF-225 IS DISABLED, IV-A1 INTAKE DAMPER IS DE-ENERGIZED. AC-40 CAN BE SELECTED "ON" OR "OFF" OR AUTO FROM THE EMS THERMOSTAT.
3. AC-40 WHENEVER ENABLED, SHALL BE CONSTANT FAN OPERATION.
4. AC-40 SHALL BE DISABLED UPON ACTIVATION OF FIRE PROTECTION SYSTEM.

KITCHEN HOOD VENTILATION CONTROL WIRING SCHEMATIC | SCALE NONE | 1

REGISTERED PROFESSIONAL ENGINEER PETER A. KRAUS No. M-31498 Exp. 12-31-12 MECHANICAL STATE OF CALIFORNIA

LICENSED ARCHITECT JAMES M. STUDNICKA C19098 GENERAL 06/08/13 STATE OF CALIFORNIA

IDENTIFICATION STAMP DIV. OF THE STATE ARCHITECT OFFICE OF REGULATION SERVICES
APPL 04-107199
AC. ___ FS. ___ SS. ___
DATE ___

South Coast Engineering Group, Inc. 5000 N. Flora, California, 92407 Tel (909) 224-2767 fax (909) 224-2711

REVISIONS	DATE
1	
2	
3	
4	
5	

P S W C GROUP
ARCHITECTS / PLANNERS
1887 BUSINESS CENTER DR., SUITE 3, SAN BERNARDINO, CA. 92408
909/890-2253 FAX: 909/890-2844

ROOSEVELT II
ELEMENTARY SCHOOL
SAN BERNARDINO CITY UNIFIED SCHOOL DISTRICT
1261 W. 16TH STREET, SAN BERNARDINO, CA.

EMS DETAILS

SCALE: NONE

JOB NO.	DRAWN BY	DATE
SSB1.02	LE	12/09/2011

M-3.2

P:\Project\SSB1.02\M-3.2.dwg

RE-BID #F09-02 ROOSEVELT II (HENRY) E.S. NEW CONSTRUCTION BID ISSUANCE SET 12/09/11

Drawing Name: P:\Project\SSB1.02\M-3.2.dwg
Date / Time: Dec 07, 2011 - 11:17am by pcsadlo