# GENERAL NOTES AND TYPICAL DETAILS — S1.0

TABLE 1 - PRIMARY REINFORCEMENT

| BAR GRADE | BAR SIZE | MIN. BEND. DIA* |
|---|---|---|
| ALL GRADES OF REINF. | #3 Thru #8 | 6 BAR DIA. |
| | #9,#10&#11 | 8 BAR DIA. |
| | #14 & # 18 | 10 BAR DIA. |

*MEASURED ON INSIDE OF BAR

TABLE 2 - STIRRUP & TIE REINFORCEMENT

| BAR SIZE | MIN. BEND DIA.* |
|---|---|
| #3 THRU #5 | 4 BAR DIA. |
| ALL OTHER BARS | SEE TABLE 1 |

*MEASURED ON INSIDE OF BAR

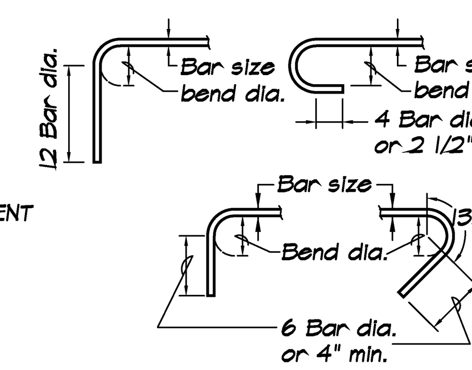


NOTES: 1. ALL REINFORCEMENT BEND COLD.
2. FIELD BENDING NOT PERMITTED U.O.N.

## REINFORCEMENT HOOKS — 1/S1.0

| CONC. STRENGTH \ BAR SIZE | #3 | #4 | #5 | #6 | #7 | #8 | #9 | #10 | #11 | COMMENTS |
|---|---|---|---|---|---|---|---|---|---|---|
| 3000 P.S.I. | 29 | 39 | 48 | 58 | 67 | 77 | 87 | 98 | 108 | TOP & BOT BARS |
| 4000 P.S.I. | 28 | 33 | 42 | 50 | 58 | 67 | 75 | 85 | 94 | TOP & BOT BARS |

NOTES:
1. THIS DETAIL APPLIES TO ELEMENTS OF THE LATERAL FORCE RESISTING SYSTEM. WHERE SPLICES IN REINFORCING OCCUR AND THEY ARE NOT OTHERWISE DEFINED, USE THIS DETAIL.
2. THE TABULATED LAP SPLICE LENGTHS ARE CLASS "B" TENSION LAP SPLICES PER CBC 1921A.5.4.5.
3. THE DISTANCE FROM THE CENTER OF THE BAR TO THE NEAREST CONCRETE SURFACE SHALL NOT BE LESS THAN TWO AND ONE HALF TIMES THE DIAMETER OF THE BAR BEING SPLICED.
4. THE CENTER-TO-CENTER SPACING TO THE CLOSEST ADJACENT SPLICE SHALL NOT BE LESS THAN THREE TIMES THE DIAMETER OF THE BAR BEING SPLICED.
5. THE BARS BEING SPLICED ARE GRADE 60 (Fy=60 ksi)
6. THE SPLICED BARS OF ALL ELEMENTS EXCEPT WALLS AND DIAPHRAGMS SHALL BE ENCLOSED BY TRANSVERSE REINFORCEMENT SPACED ALONG THE FULL SPLICE LENGTH NOT GREATER THAN THREE TIMES THE DIAMETER OF THE BAR BEING SPLICED, OR FOUR INCHES MAXIMUM, UNLESS OTHERWISE DETAILED.
7. INCREASE THE TABULATED LENGTHS BY A FACTOR OF 1.3 WHERE LIGHT WEIGHT CONCRETE IS USED.
8. INCREASE THE TABULATED LENGTHS BY 1.5 WHERE EPOXY COATED BARS ARE PROVIDED.

## REINFORCING STEEL SPLICES IN CONCRETE ELEMENTS OF THE LATERAL FORCE RESISTING SYSTEM — 2/S1.0

| BAR SIZE | #3 | #4 | #5 | #6 | #7 | #8 | #9 | #10 | #11 | CONCRETE STRENGTH | COMMENTS |
|---|---|---|---|---|---|---|---|---|---|---|---|
| TYPICAL | 22 | 29 | 36 | 43 | 63 | 72 | 81 | 91 | 101 | F'c=3000 psi | BOT BARS |
| WITH TIES | 16 | 17 | 22 | 26 | 38 | 43 | 49 | 57 | 66 | | TOP BARS SEE NOTE#11 |
| TYPICAL | 19 | 25 | 31 | 37 | 54 | 62 | 70 | 79 | 87 | F'c=4000 psi | BOT BARS |
| WITH TIES | 16 | 16 | 22 | 28 | 42 | 49 | 56 | 65 | 73 | | TOP BARS SEE NOTE#11 |

NOTES:
1. THIS DETAIL APPLIES ONLY WHERE SPECIFICALLY REFERENCED ON THE DRAWINGS.
2. FOR SPLICES OF REINFORCEMENT IN ELEMENTS THAT ARE PART OF THE LATERAL FORCE-RESISTING SYSTEM, OR FOR SPLICES NOT OTHERWISE SPECIFIED, SEE DETAIL, "REINFORCING STEEL SPLICES IN ELEMENTS OF THE LATERAL FORCE-RESISTING SYSTEM".
3. THE TABULATED LAP SPLICE LENGTHS ARE CLASS "B" TENSION LAP SPLICES PER ACI 318-95 SECTIONS 12.2 AND 12.15.
4. THE DISTANCE FROM THE CENTER OF THE BAR TO THE NEAREST CONCRETE SURFACE SHALL BE AT LEAST ONE AND ONE-HALF TIMES THE DIAMETER OF THE BAR.
5. THE CENTER-TO-CENTER SPACING TO THE CLOSEST ADJACENT SPLICE SHALL NOT BE LESS THAN THREE TIMES THE DIAMETER OF THE BAR BEING SPLICED.
6. IF LAP SPLICES ARE STAGGERED, THERE SHALL BE NO OVERLAP BETWEEN ADJACENT SPLICES ACROSS THE ENTIRE LENGTH OF THE SPLICE.
7. THE BARS BEING SPLICED ARE GRADE 60 (Fy=60 ksi)
8. "WITH TIES" APPLIES TO ELEMENTS WHICH HAVE TIES AND CROSSTIES ENCLOSING THE BARS BEING SPLICED ACCORDING TO THE FOLLOWING CRITERIA.
 A- TIES, CROSSTIES, OR STIRRUPS ARE AT LEAST #3 BARS OF AT LEAST GRADE 40 (Fy=40 ksi)
 B- TIES, CROSSTIES, OR STIRRUPS ARE SPACED NOT GREATER THAN THREE TIMES THE DIAMETER OF THE BAR BEING SPLICED, BUT NOT TO EXCEED FOUR INCHES MAXIMUM.
 C- AT LEAST EVERY OTHER BAR IN A ROW SHALL BE ENCLOSED BY THE CORNER OF A TIE, CROSSTIE, OR STIRRUP.
 D. THERE SHALL BE NO MORE THAN NINE BARS IN LINE IN ANY PLANE OF SPLITTING.
9. INCREASE THE TABULATED LENGTHS BY A FACTOR OF 1.3 WHERE LIGHT WEIGHT CONCRETE IS USED.
10. INCREASE THE TABULATED LENGTHS BY 1.5 WHERE EPOXY COATED BARS ARE PROVIDED.
11. INCREASE THE TABULATED LENGTHS BY A FACTOR OF 1.3 WHERE HORIZONTAL REINFORCENENT IS PLACED SUCH THAT MORE THAN 12 INCHES OF FRESH CONCRETE IS CAST BELOW THE SPLICE.

## REINFORCING STEEL SPLICES IN CONCRETE — 3/S1.0

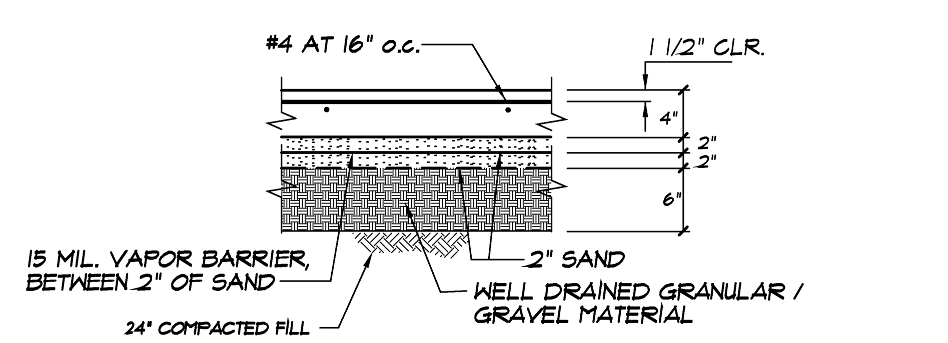


NOTE : SUBGRADE PREPARATION SHALL BE COMPLIED WITH GEOTECHNICAL REPORT

## INTERIOR SLAB — 4/S1.0

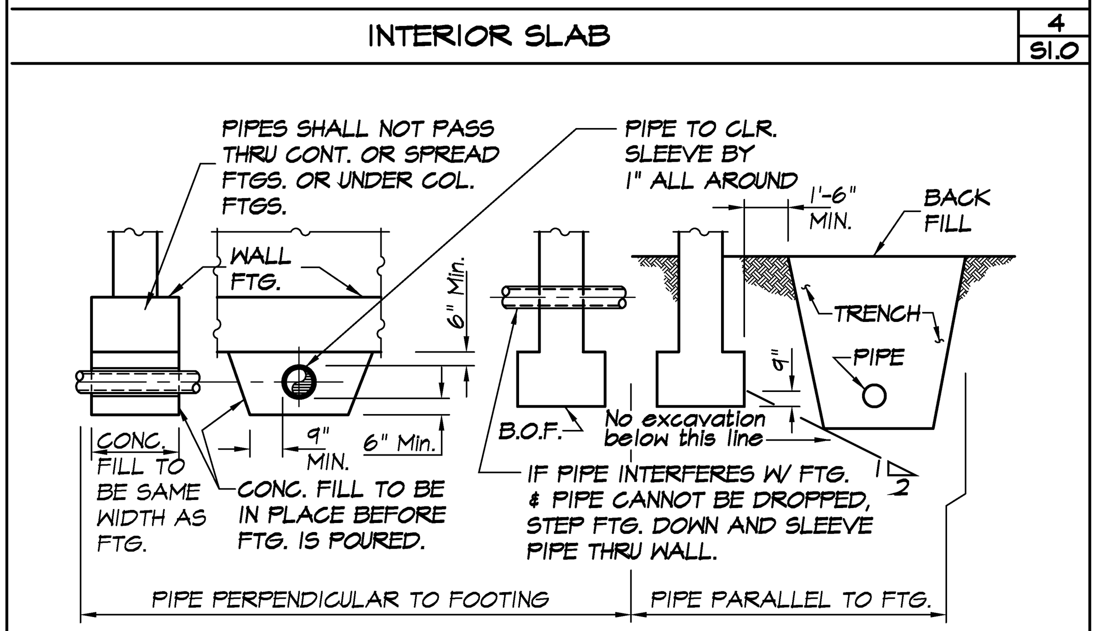


## PIPE AT WALL FOOTINGS — 5/S1.0

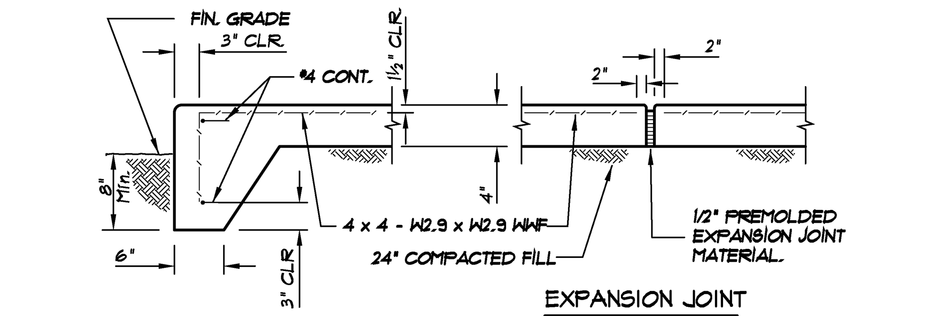


NOTE : SUBGRADE PREPARATION SHALL BE COMPLIED WITH GEOTECHNICAL REPORT

## SITE EXTERIOR SLAB DETAILS — 6/S1.0

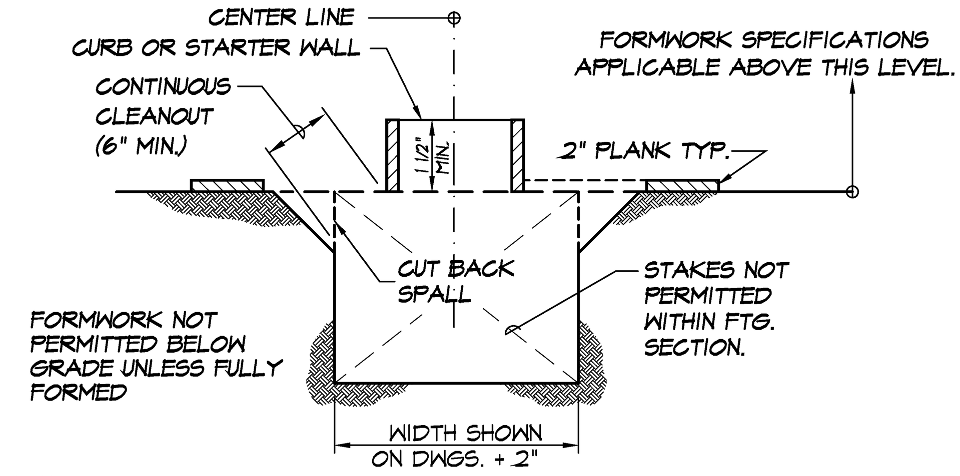


NOTE:
FOUNDATION CONCRETE MAY BE PLACED DIRECTLY INTO NEAT EXCAVATIONS PROVIDED THE FOUNDATION TRENCH WALLS ARE STABLE AS DETERMINED BY THE ARCHITECT (STRUCTURAL ENGINEER), SUBJECT TO THE APPROVAL OF THE OFFICE OF THE STATE ARCHITECT. IN SUCH CASE THE MINIMUM FORMWORK SHOWN ON THE THE DRAWINGS IS MANDATORY TO ENSURE CLEAN EXCAVATIONS IMMEDIATELY PRIOR TO AND DURING THE PLACING OF CONCRETE.

## MANDATORY TYPICAL FOOTING FORMING — 7/S1.0

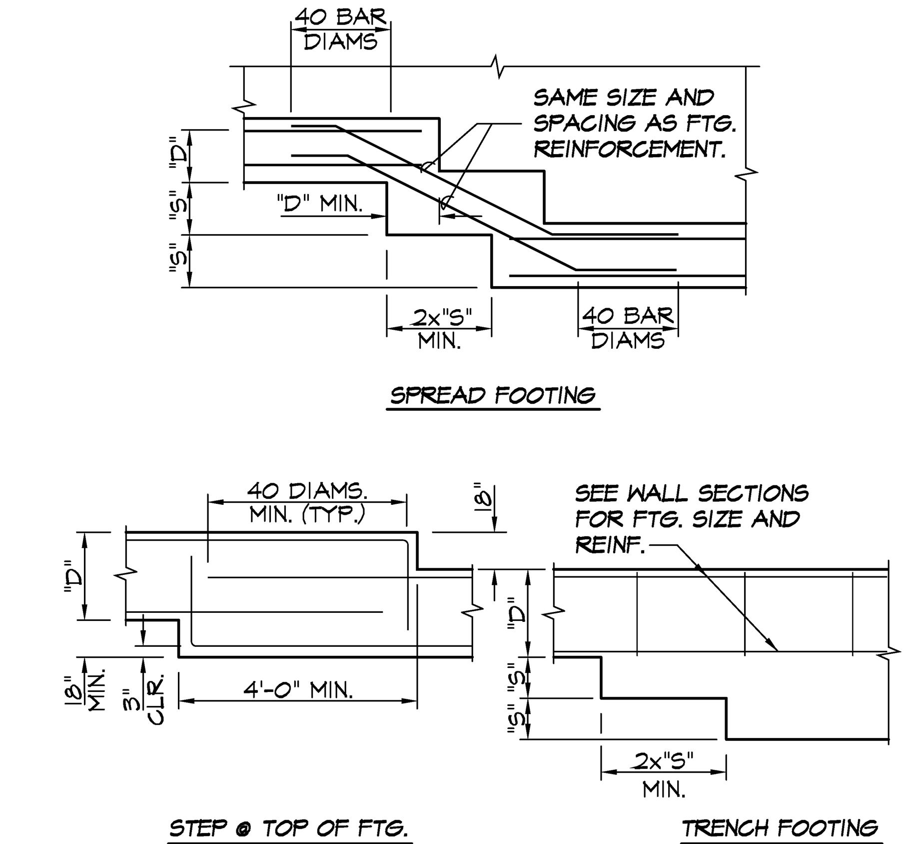


## TYPICAL STEP IN FOOTING WALL — 8/S1.0

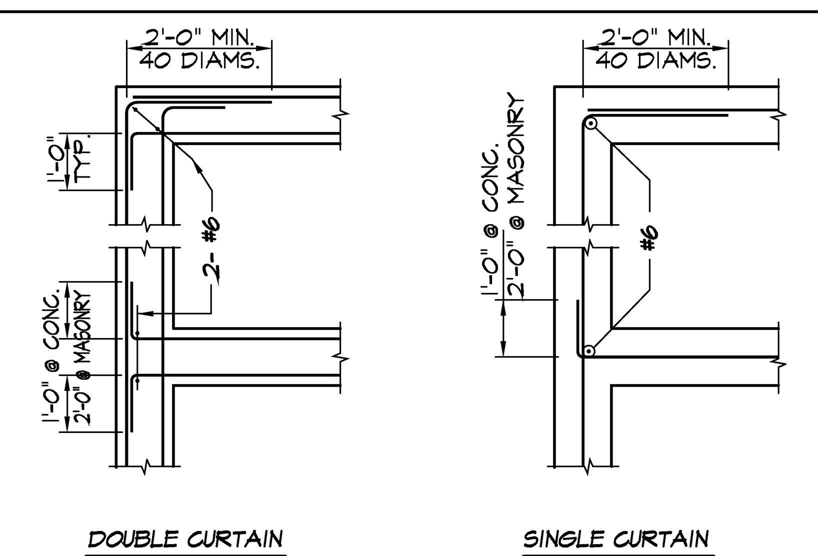


## TYPICAL REINFORCING IN WALLS AND FOOTING AT CORNERS AND INTERSECTIONS — 9/S1.0

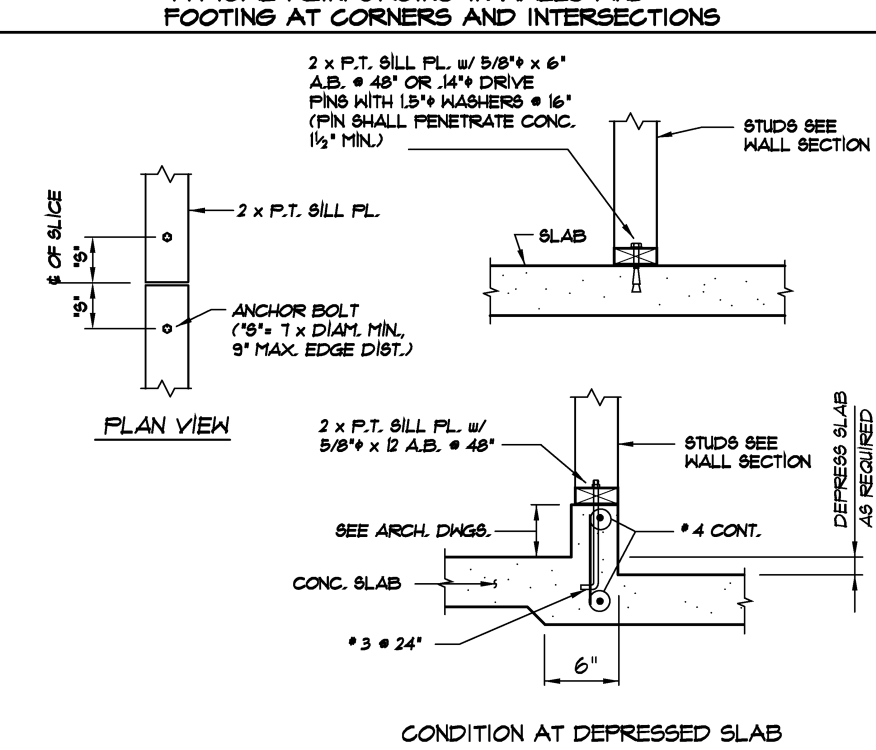


## NON-BEARING PARTITION — 10/S1.0

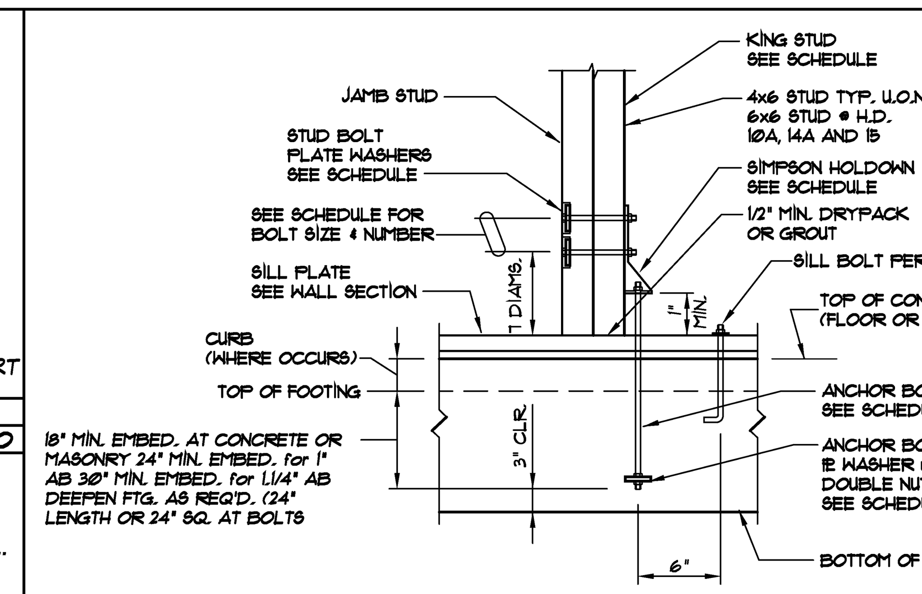


NOTE:
1. RETIGHTEN ALL BOLTS BEFORE WALL FINISH IS INSTALLED.
2. ANCHOR BOLTS MUST COMPLY WITH ASTM A307 or A36, EDGE DISTANCE 8" MIN

HOLDOWN BOLTS & WASHER SCHEDULE

| HOLDOWN | ANCHOR BOLT SIZE | STUD BOLT SIZE | STUD BOLT PLATE WASHER | ANCHOR BOLT PLATE WASHER | KING POST SIZE (MIN) |
|---|---|---|---|---|---|
| HD2A | 5/8"φ | 2- 5/8"φ | 2½" SQ. x 1/4" | 2½" SQ. x 3/8" | 4 x 6 # |
| HD5A | 3/4"φ | 2- 3/4"φ | 3" SQ. x 5/16" | 2½" SQ. x 3/8" | 4 x 6 # |
| HD6A | 7/8"φ | 2- 7/8"φ | 3" SQ. x 5/16" | 3" SQ. x 1/2" | 6 x 6 # |
| HD8A | 7/8"φ | 3- 7/8"φ | 3" SQ. x 5/16" | 3" SQ. x 1/2" | 6 x 6 # |
| HD10A | 7/8"φ | 4- 7/8"φ | 3" SQ. x 5/16" | 3" SQ. x 1/2" | 6 x 6 # |
| HD14A | 1"φ | 4- 1"φ | 3½" SQ. x 3/8" | 3½" SQ. x 5/8" | 6 x 6 # |
| HD15 | 1¼"φ | 5- 1"φ | 3½" SQ. x 3/8" | 3½" SQ. x 5/8" | 6 x 6 # |

## TYPICAL STUD ANCHOR — 11/S1.0

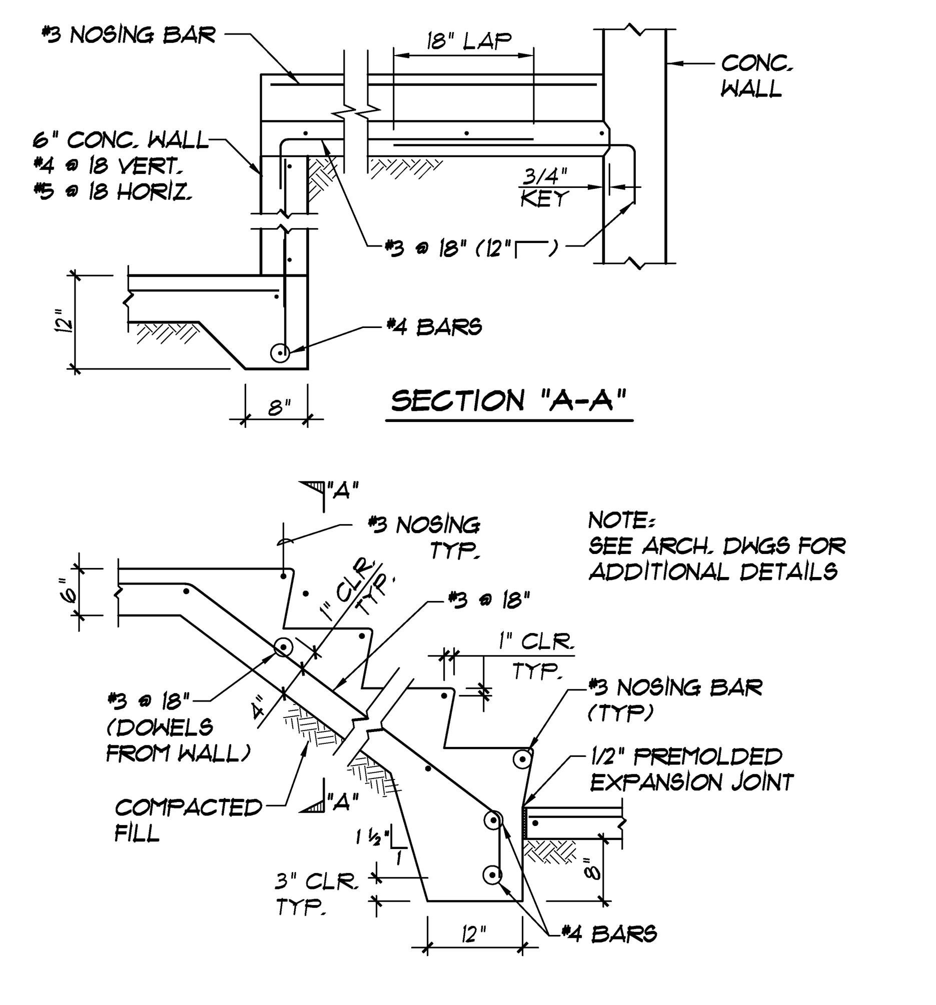


## TYPICAL CONCRETE STEPS ON GRADE — 12/S1.0

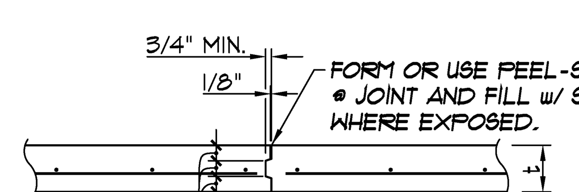


NOTES:
1.) ADJACENT POURS MUST BE MADE AT LEAST 8 HOURS APART.
2.) INTERRUPT ALL REINF. AT JOINT.

CONSTRUCTION JOINT (C.J.)

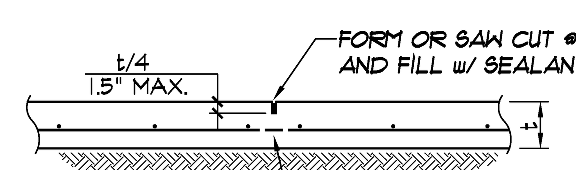


NOTES:
1.) MAKE SAWCUT WITHIN 24 HRS. OF POUR.
2.) INTERRUPT ALL REINF. AT JOINT.

WEAKENED PLANE JOINT (W.P.J.)

## JOINTS IN CONCRETE SLABS ON GRADE (S.J.) — 13/S1.0

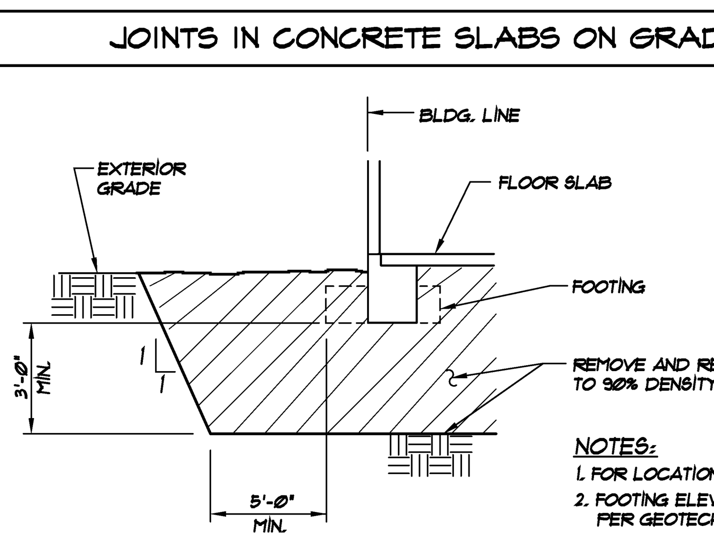


NOTES:
1. FOR LOCATION SEE FOUNDATION PLAN
2. FOOTING ELEVATIONS MAYBE STEPPED, PER GEOTECH GUIDLINES.

## BLDG. PAD TYPICAL OVEREXCAVATION — 14/S1.0

## GENERAL NOTES

1. THE CONTRACTOR SHALL VERIFY DIMENSIONS, CONDITIONS AND ELEVATIONS BEFORE STARTING WORK. THE ARCHITECT SHALL BE NOTIFIED, IMMEDIATELY, IF ANY DISCREPANCIES ARE FOUND.
2. THE TYPICAL NOTES AND DETAILS SHALL APPLY IN ALL CASES UNLESS SPECIFICALLY DETAILED ELSEWHERE. WHERE NO DETAIL IS SHOWN, CONSTRUCTOR SHALL ADVISE ENGINEER/ARCHITECT TO OBTAIN DETAILS AND AS PER REQUIRED BY BUILDING CODE.
3. GOVERNING CODE: CALIFORNIA BUILDING CODE, TITLE 24, PART 2 2001 EDITION (CBC 2001)
4. DESIGN LOADS: DEAD LOAD = 20 psf
 ROOF LIVE LOAD = 20 psf
 MECH'L AREA LIVE LOAD = 50 psf (TOTAL)
 SEISMIC LOAD = ZONE 4, Z = 0.4, Ca = 0.572, Cv = 1.02, Na = 1.3, Nv = 1.6, I = 1.0, EXCEPT I = 1.15 AT BLDGS. C, D, E, F.
5. SEE SPECIFICATIONS FOR MATERIALS AND WORKMANSHIP REQUIREMENTS. SPECIFICATIONS ARE A PART OF THESE DRAWINGS.
6. REFER TO MECHANICAL AND ELECTRICAL DRAWINGS FOR LOCATION OF OPENINGS OR SUPPORTS FOR THEIR RESPECTIVE ITEMS. NOTIFY ARCHITECT, PRIOR TO CONSTRUCTION OF ANY INTERFERENCE OR INCOMPATIBILITY.

FOUNDATIONS:

1. CHARACTER OF SOIL: COMPACTED FILL
2. SOILS REPORT BY: GEOTECHNICAL RECOMANDATION AND GEOLOGICAL GEOLOGICAL HAZARD STUDY- CONVERSE CONSULTANTS
3. REPORT NUMBER: 04-81-156-02, URS JOB# 38000786.22000 DATE : JUNE 8 , 2005
4. DESIGN SOIL PRESSURE: 2000 PSF
5. MINIMUM DEPTH (BELOW ADJACENT GRADE) = 18" CONTINUOUS FTGS. = 18" SPREAD FTG'S.
6. MINIMUM WIDTH = 12"
7. FOUNDATION EXCAVATIONS AND COMPACTION SHALL BE APPROVED BY THE SOILS ENGINEER AND THE INSPECTOR BEFORE PLACING CONCRETE.
8. REFER TO PROJECT SPECIFICATIONS FOR EXCAVATION. RECOMPACTION, AND ALL SITE PREPARATION REQUIREMENTS, SEE FOUNDATION PLAN FOR AREA AND SECTION 14/S1.0 FOR DETAIL.

ERECTION NOTES:

1. THE CONTRACTOR SHALL BE RESPONSIBLE FOR COMPLIANCE WITH (CAL-OSHA) SAFETY ORDERS. APPROVAL OF SHOP DRAWINGS BY THE ARCHITECT OR STRUCTURAL ENGINEER SHALL NOT BE CONSTRUED AS ACCEPTING THIS RESPONSIBILITY.
2. ALL STRUCTURAL FRAMING MEMBERS SHALL BE ADEQUATELY SHORED AND BRACED DURING ERECTION AND UNTIL FULL VERTICAL AND LATERAL SUPPORT IS PROVIDED BY ADJOINING MEMBERS AND DIAPHRAM.

DRAINAGE AND WATERPROOFING:

1. THE STRUCTURAL PLANS AND DETAILS DO NOT INCLUDE DETAILS OR DESIGNS FOR DRAINAGE FROM, OR WATERPROOFING OF EXTERIOR OR INTERIOR SURFACE OF THE BUILDING.
2. THE STRUCTURAL ENGINEER SHALL NOT BE RESPONSIBLE FOR DRAINAGE OF WATER AWAY FROM THE EXTERIOR PERIMETER OF THE BUILDING, OR DETAILS FOR EXCLUSION OF WATER FROM ANY INTERIOR OR EXTERIOR AREA.

NON STRUCTURAL WORK:

1. SEE ARCHITECTURAL DRAWINGS FOR LOCATION AND EXTENT OF EXTERIOR WALKWAYS, STEPS, PLANTERS, FENCES, RETAINING WALLS AND PAVED AREAS.
2. SEE ARCHITECTURAL DRAWINGS FOR SIZE AND LOCATION OF NON-BEARING PARTITIONS.
3. SEE ARCHITECTURAL DRAWINGS FOR SIZE AND LOCATION OF CONCRETE CURBS, RAISED BASES, AND FLOOR DEPRESSIONS.

MATERIALS

1. REINFORCING STEEL:

A. IN ALL CONCRETE UNLESS NOTED OTHERWISE - ASTM A 615, GRADE 60
B. TIES IN CONCRETE BEAMS -ASTM A615, GRADE 40 FOR #3, GRADE 60 FOR #4 AND LARGER
C. REINFORCING SHALL BE SPLICED WITH A MIN. LAP LENGTH PER TABLE 2/S1.0. ALL LAPS SHALL BE STAGGERED 24" MINIMUM.
D. CONCRETE COVERAGE FOR REINFORCING BARS (TO FACE OF
 1. CONCRETE POURED AGAINST SOIL------------- 3"
 2. CONCRETE POURED IN FORMS BELOW GRADE------ 2"

2. CONCRETE

A. ALL ELEMENTS EXCEPT AS OTHERWISE NOTED: f'c= 3000 PSI. -NORMAL WEIGHT STRENGTH AT 28 DAYS.
B. DRYPACK: MIX 1 PART CEMENT TO 1-1/2 PARTS FINE AGGREGATE WITH A MINIMUM AMOUNT OF WATER.
C. CONTINUOUS INSPECTION BY A CERTIFIED REGISTERED PROJECT LAB INSPECTOR IS REQUIRED FOR ALL CONCRETE.
D. ALL REINFORCING STEEL, INSERTS, ANCHOR BOLTS, DOWELS, AND OTHER ARCHITECTURAL, MECHANICAL AND ELECTRICAL ITEMS TO BE EMBEDDED IN THE CONCRETE SHALL BE WELL SECURED IN POSITION PRIOR TO PLACING CONCRETE.

3. STRUCTURAL STEEL

A. ALL BEAM CONNECTIONS SHALL BE IN ACCORDANCE WITH A.I.S.C. RECOMMENDATIONS.
B. BASE PLATES SHALL BE LEVELED ON DOUBLE NUTS. NO LEVELING PLATES ALLOWED. DRYPACK TO FIRM BEARING AFTER LEVELING.
C. ALL SHOP WELDING SHALL BE DONE BY QUALIFIED WELDERS IN THE SHOP OF AN APPROVED FABRICATOR.
D. ALL FIELD WELDING SHALL HAVE CONTINUOUS INSPECTION.
E. MATERIAL SPECIFICATIONS.
 1. BARS, PLATES, ASTM 36
 2. TUBES - ASTM A500-B
 3. PIPE - ASTM A53, GRADE B
 4. BOLTS - ASTM A307 UNLESS OTHERWISE NOTED, ASTM A325-X
 5. WELDING ELECTRODES - E70XX.
 6. GUSSET & BASE PLATES @ BRACE FRAMES, ASTM A572 GRADE 50.
 7. WIDE FLANGE (Wx) BEAMS OR COLUMNS - ASTM A992-50

4. LUMBER

A. DOUGLAS FIR LARCH, GRADE NO. 1 FOR JOISTS, EXCEPT AS NOTED, NO.1 FOR BEAMS AND POSTS AS NOTED. NO. 1 GRADE FOR PLATES, SILLS & ALL STUDS (U.O.N.), IN ACCORDANCE WITH THE 2001 CBC 23A.
B. TREATED SILL PLATES, DOUGLAS FIR NO. 2 MIN., EA. PIECE SHALL BEAR THE QUALITY STAMP OF AN AGENCY APPROVED BY THE DIVISION OF THE STATE ARCHITECT.
C. PLYWOOD: STRUCTURAL 1, IN ACCORDANCE WITH THE LATEST EDITION OF U.S. PRODUCT STANDARD PS 1 FOR CONSTRUCTION AND INDUSTRIAL PLYWOOD. USE EXTERIOR GLUE.
D. WOOD FRAMING NOTES:
 1. ALL LUMBER SHALL BE S4S (U.O.N.) AND GRADE MARKED
 2. MUD SILLS SHALL BE PRESSURE TREATED DOUGLAS FIR LUMBER.
 3. BOLT HOLES THROUGH WOOD SHALL BE DRILLED 1/16" MAXIMUM LARGER THAN THE DIAMETER OF THE BOLT TO BE INSTALLED.
 4. BOLTS THROUGH WOOD SHALL BE FITTED WITH STANDARD WASHERS UNO.
 5. SILL PLATES FOR EXTERIOR WALLS AND STUD WALLS ON CURBS SHALL BE ATTACHED TO CONCRETE WITH 5/8" DIAMETER BY 12" ANCHOR BOLTS AT 4'-0" MAXIMUM ON CENTER AND WITHIN 7 x DIAM. (MIN.), 9" (MAX.) OF THE ENDS OF SILL MEMBERS, UNLESS OTHERWISE NOTED WITH A MIN. OF 2 BOLTS EACH SILL PIECE. SILL BOLTS TO BE EMBEDDED 7" MIN. INTO CONCRETE WALLS / FOUNDATIONS.
 6. WHERE TREATED WOOD MEMBERS ARE CUT, DRILLED, NOTCHED, OR OTHERWISE MODIFIED SUCH THAT PRESERVATIVE TREATMENT IS REMOVED, SUCH MEMBESR SHALL BE TREATED WITH A PRESERVATIVE, APPROVED BY THE ARCHITECT AND THE DIVISION OF THE STATE ARCHITECT, ON ALL SURFACES FROM WHICH THE PRESERVATIVE TREATMENT HAS BEEN REMOVED.
 7. PROVIDE SIMPSON "STANDARD U JOIST HANGERS" AT FLUSH JOISTS CONNECTIONS, AND SIMPSON "HU" AT FLUSH BEAM CONNECTIONS EXCEPT AS NOTED. SIMPSON "PC" CAPS @ POST- BEAM CONNECTIONS, EXCEPT AS DETAILED OR NOTED DIFFERENTLY.
 8. THE NUMBER AND SIZE OF COMMON NAILS CONNECTING WOOD MEMBERS TOGETHER SHALL BE IN ACCORDANCE WITH TABLE NO. 23A-II-B-1 OF THE CALIFORNIA BUILDING CODE, UNLESS OTHERWISE NOTED OR DETAILED.
 9. PROVIDE DOUBLE JOISTS OR DOUBLE TRUSSES UNDER ALL MECH. EQUIP. (U.O.N.)
 10. USE OF MACHINE APPLIED NAILING IS SUBJECT TO A SATISFACTORY JOBSITE DEMONSTRATION FOR EACH PROJECT AND THE APPROVAL BY ARCHITECT, ENGINEER AND ENFORCEMENT AGENCY. THE APPROVAL IS SUBJECT TO CONTINUED SATISFACTORY PERFORMANCE. MACHINE NAILING WILL NOT BE APPROVED IN 5/16" PLYWOOD, IF NAIL HEADS PENETRATE THE OUTER PLY. MORE THAN WOULD BE NORMAL FOR A HAND HAMMER OR IF MINIMUM ALLOWABLE EDGE DISTANCES ARE NOT MAINTAINED THE PERFORMANCE WILL BE DEEMED UNSATISFACTORY AND MACHINE NAILING SHALL BE DISCONTINUED.
 11. RETIGHTEN ALL BOLTS PRIOR TO CLOSING IN WALLS.
E: GLULAM LUMBER: STRUCTURAL GLUED LAMINATED LUMBER SHALL BE DOUGLAS FIR FABRICATED TO COMFORM TO STANDARD SPECICATIONS FOR THE DESIGN AND FABRICATION OF STRUCTURAL GLUED LAMINATED LUMBER WEST COAST LUMBERMANS ASSOC. AND TO THE LATEST A.I.T.C. 117 SPECIFICATIONS. PROVIDE COMBINATION 24F-V8-INDUSTRIAL APPEARANCE GRADE, UNLESS NOTED OTHERWISE. (SEE SPEC. FOR FOR EXTEROIR USE)
 ALL GLUED LAMINATED LUMBER SHALL BE FABRICATED BY A LICENSED FABRICATOR APPROVED BY THE ENFORCEMENT AGENCY.
F. ALL STRUCTURAL GLUED LAMINATED TIMBER SHALL BE CONTINUOUSLY INSPECTED DURING FABRICATION BY AN INSPECTOR SPECIFICALLY APPROVED BY THE DIVISION OF THE STATE ARCHITECT. AN A.I.T.C. CERTIFICATE DOES NOT SATISFY THIS REQUIREMENT.
G. THE MOISTURE CONTENT OF ALL LUMBER DURING CONSTRUCTION SHALL NOT EXCEED 19%, GLU-LAM BEAMS: 12%
H. LUMBER USED AS VERTICAL STUDS IN WALL CONSTRUCTION SHALL NOT BE OUT OF PLUMB MORE THAN 1/8" IN 10'-0"
I. FASTENERS FOR PRESSURE-PRESERVATIVE TREATED AND FIRE-RETARDANT TREATED WOOD SHALL BE OF HOT-DIPPED ZINC COATED GALVANIZED, STAINLESS STEEL FASTENERS FOR WOOD FOUNDATIONS SHALL BE AS REQUIRED IN CHAPTER 18A, DIVISION II. FASTENERS REQUIRED TO BE CORROSION RESISTANT SHALL BE EITHER ZINC-COATED FASTENERS, FASTENERS OR STAINLESS STEEL FASTENERS.

5. MASONRY

A. CONCRETE BLOCK-2001CBC 21-4 & ASTM C90, TYPE I, GRADE N, MEDIUM CONSTRUCTION. F'm = 1500 psi.
B. GROUT: F'c = 2000 psi AT 28 DAYS. 1 PART CEMENT, 0-1/10 PARTS HYDRATED LIME/LIME PUTTY, 3 PARTS FINE AGGREGATE (MAX.) MAX. SLUMP 10" SEE SPEC. FOR GROUT MIX. CONTROL.
C. TYPE S MORTAR: 1 CEMENT, 3 SAND, 5/16 LIME. F'c = 1800 psi.
D. ALL MASONRY CELLS SHALL BE FILLED WITH SOLID GROUT. (U.O.N.) ONLY LOW-LIFT GROUT SHALL BE USED.
E. MASONRY SHALL BE BUILT TO PRESERVE THE UNOBSTRUCTED VERTICAL CONTINUITY OF THE CELLS. BOND SHALL BE PROVIDED BY LAPPING UNITS IN SUCCESSIVE VERTICAL COURSES. ALL HEAD JOINTS SHALL BE SOLIDLY FILLED WITH MORTAR FOR A DISTANCE IN FROM THE FACE OF THE WALL OF THE UNIT NOT LESS THAN THE LONGITUDINAL FACE SHELL THICKNESS. CELLS SHALL BE FILLED WITH GROUT IN LIFTS NOT EXCEEDING 2'-0" IN HEIGHT. WHEN GROUTING IS STOPPED FOR ONE HOUR OR LONGER, HORIZONTAL JOINTS SHALL BE FORMED BY STOPPING THE GROUT 1 1/2" BELOW THE TOP OF THE UPPERMOST UNIT. REINFORCMENT SHALL BE PLACED AS INDICATED ON THE PLANS, AND SHALL BE HELD IN POSITION IN VERT. CELLS BY MEANS OF A MECHANICAL DEVICE AT INTERVALS NOT EXCEEDING 192 DIAMETERS OF THE REINFORCING AND AT TOPS AND BOTTOMS OF ALL BARS.
F. ALL MASONRY WORK SHALL HAVE SPECIAL INSPECTION.

WOOD SCREWS:

A. SIMPSON 1/4"φ "STRONG DRIVE S-SERIES WOOD SCREWS (ICBO RER-5260).
B. THE SCREW SHALL BE MANUFACTURED FROM 1022 STEEL (SAE GRADE 5).
C. BENDING YIELD STRENGTH SHALL BE GREATER THAN OR EQUAL TO 1/2 217,000 PSI.
D. WHERE NOT OTHERWISE NOTE, EDGE DISTANCES, END DISTANCES, AND SPACING OF WOOD SCREWS SHALL BE SUFFICIENT TO PREVENT SPLITTING OF THE WOOD, BUT IN NO CASE SHALL THEY BE LESS THAN:
 - EDGE DISTANCE: 1"
 - END DISTANCE: 2"
 - SPACING OF BOLTS IN A ROW: 1 1/2"
 - SPACING BETWEEN ROWS: 1 1/2"

## TEST LOAD EXPANSION ANCHORS

| ANCHOR DIAMETER (in) | WEDGE LOAD (lbs) | WEDGE TORQUE (FT-lbs) | SLEEVE LOAD (lbs) | SLEEVE TORQUE (FT-lbs) | SHELL LOAD (lbs) | SHELL TORQUE (FT-lbs) |
|---|---|---|---|---|---|---|
| 1/4" | 800 | 10 | 400 | 4 | 1000 | - |
| 5/16" | - | - | 400 | 5 | 1400 | - |
| 3/8" | 1100 | 25 | 700 | 10 | 1800 | - |
| 1/2" | 2000 | 50 | 900 | 20 | 2700 | - |
| 5/8" | 2300 | 80 | 1100 | 45 | 3700 | - |
| 3/4" | 3700 | 150 | 1400 | 90 | 5400 | - |
| 1" | 5800 | 250 | - | - | - | - |

NOTES :
1. ANCHOR DIAMETER REFERS TO THE THREAD SIZE FOR THE WEDGE & SHELL CATEGORIES AND TO THE ANCHOR OUTSIDE DIAMETER FOR THE SLEEVE CATEGORY.
2. APPLY PROOF TEST LOADS TO WEDGE & SLEEVE ANCHORS WITHOUT REMOVING THE NUT IF POSSIBLE. IF NOT, REMOVE NUT & INSTALL A THREADED COUPLER TO THE SAME TIGHTNESS OF THE ORIGINAL NUT USING A TORQUE WRENCH & APPLY LOAD.
3. FOR SLEEVE/SHELL INTERNALLY THREADED CATEGORIES, VERIFY THAT THE ANCHOR IS NOT PREVENTED FROM WITHDRAWING BY A BASEPLATE OR OTHER FIXTURES. IF RESTRAINT IS FOUND, LOOSEN AND SHIM OR REMOVE FIXTURES PRIOR TO TESTING.
4. REACTION LOADS FROM TEST FIXTURES MAY BE APPLIED CLOSE TO THE ANCHOR BEING TESTED, PROVIDED THE ANCHOR IS NOT RESTRAINED FROM WITHDRAWING BY THE FIXTURES.
5. SHELL TYPE ANCHORS SHOULD BE TESTED AS FOLLOWS: VISUALLY INSPECT 25% FOR FULL EXPANSION AS EVIDENCED BY THE LOCATION OF THE EXPANSION PLUG IN THE ANCHOR BODY. PLUG LOCATION OF A FULLY EXPANDED ANCHOR SHOULD BE AS RECOMMENDED BY THE MANUFACTURER, OR, IN THE ABSENCE OF SUCH RECOMMENDATION, AS DETERMINED ON THE JOB SITE FOLLOWING THE MANUFACTURER'S INSTALLATION INSTRUCTIONS, AND: PROOF LOAD 5% AS INDICATED IN THE TABLE ABOVE, BUT NOT LESS THAN THREE ANCHORS PER DAY FOR EACH DIFFERENT PERSON OR CREW INSTALLING ANCHORS, OR: TEST 50% OF THE INSTALLED ANCHORS PER 2624(d)
6. TEST EQUIPMENT IS TO BE CALIBRATED BY AN APPROVED TESTING LABORATORY IN ACCORDANCE WITH STANDARD RECOGNIZED PROCEDURES.
7. TORQUE TEST VALUES FOR SHELL TYPE ANCHORS ARE OMITTED DUE TO A LACK OF DATA. TORQUE TESTING CAN OCCUR ON AN INDIVIDUAL BASIS WHEN TEST PROCEDURES ARE SUBMITTED AND APPROVED BY THE ENFORCEMENT AGENCY. TABULATED VALUES MAY BE FORTHCOMING ONCE THE ENFORCEMENT AGENCY HAS MORE DATA TO EVALUATE THE FEASIBILITY OF STANDARD TORQUE VALUES.
8. THE FOLLOWING CRITERIA APPLY FOR THE ACCEPTANCE OF INSTALLED ANCHORS: HYDRAULIC RAM METHOD : THE ANCHOR SHOULD HAVE NO OBSERVABLE MOVEMENT AT THE APPLICABLE TEST LOAD. FOR WEDGE AND SLEEVE TYPE ANCHORS, A PRACTICAL WAY TO DETERMINE OBSERVABLE MOVEMENT IS THAT THE WASHER UNDER THE NUT BECOMES LOOSE. TORQUE WRENCH METHOD : THE APPLICABLE TEST TORQUE MUST BE REACHED WITHIN THE FOLLOWING LIMITS: WEDGE OR SLEEVE TYPE : ONE-HALF (1/2) TURN OF THE NUT. ONE-QUARTER (1/4) TURN OF THE NUT FOR THE 3/8" SLEEVE ANCHOR ONLY.
9. TEST SHOULD OCCUR 24 HOURS MINIMUM AFTER INSTALLATION OF THE SUBJECT ANCHORS.

LEGEND

- CONCRETE
- CONCRETE BLOCK
- CONTINUOUS WOOD
- BLOCKING
- FOOTING STEP
- ELEVATION BOTT. FTG.
- CURB
- DETAIL NO. / SHEET NO.
- FINISH FLOOR ELEV.
- SHEAR WALL

ABBREVIATIONS

| | |
|---|---|
| O.F.C. | OUTSIDE FACE CONCRETE |
| O.F.S. | OUTSIDE FACE OF STUDS |
| ℙ | PLATE (STEEL) |
| PL. | PLATE (WOOD) |
| SIM. | SIMILAR |
| SYMM. | SYMMETRICAL |
| W.W.F. | WELDED WIRE FABRIC |
| S.S. | SELECT STRUCTURAL |
| S.P. | SHEAR PANEL |
| C.A. | COLUMN ABOVE |
| C.B. | COLUMN BELOW |
| TYP. | TYPICAL |
| E. W. | EACH WAY |
| JS. | JAMB STUD |
| KS. | KING STUD |

## POWDER DRIVEN SHOT PINS

(LOW VELOCITY)

SHOT PINS MAY BE USED FOR SHEAR LOADS AND MAY BE USED IN TENSION TO SUPPORT LOADS LESS THAN 100 POUNDS FOR MINOR LOADS LIKE ACOUSTICAL CEILINGS, DUCT WORK CONDUIT, ETC. ANY SHOT ANCHORS MUST HAVE I.C.B.O. APPROVAL FOR THE TYPE OF CONCRETE USED ON THE JOB. SHOT PINS SHALL NOT BE USED IN CONCRETE CURBS AND SLAB EDGES.

THE ALLOWABLE LOADS SHALL BE 100 POUNDS OR 80 % OF I.C.B.O. APPROVED VALUES, WHICHEVER IS LESS. QUALIFICATION FOR USE OF ALL POWER ACTUATED TOOLS MUST MEET ANSI A10.3 STANDARD AS REQUIRED BY THE MANUFACTURER AND ALL OSHA REQUIREMENTS.

TESTING

THE OPERATOR, TOOL, AND FASTENER SHALL BE PRE-QUALIFIED BY THE PROJECT INSPECTOR. HE SHALL OBSERVE THE TESTING OF THE FIRST 10 FASTENER INSTALLATIONS. A TEST "PULL-OUT" LOAD OF LESS THAN TWICE THE DESIGN LOAD SHALL BE APPLIED TO THE PIN IN SUCH A MANOR AS NOT TO RESIST THE SPALLING TENDENCY OF THE CONCRETE SURROUNDING THE PIN. THEREAFTER, RANDOM TESTS UNDER THE PROJECT INSPECTOR'S SUPERVISION SHALL BE MADE OF APPROXIMATELY 1 IN 10 PINS. IF ANY PIN FAILS TESTING, TEST ALL PINS OF THE SAME CATEGORY NOT PREVIOUSLY TESTED UNTIL TWENTY (20) CONSECUTIVE PASS, THEN RESUME THE INITIAL TESTING FREQUENCY.

## TYP. NAILING SCHEDULE

| CONNECTION | COMMON WIRE NAILS |
|---|---|
| JOISTS OR RAFTERS TO SIDES OF STUDS | |
| EIGHT (8) INCH JOISTS OR LESS | 3- 16d |
| FOR EACH ADDITIONAL FOUR (4) INCHES IN DEPTH OF JOISTS | 1- 16d |
| JOISTS OR RAFTERS AT ALL BEARINGS- | |
| TOE NAILS, EACH SIDE | 3-10d |
| CEILING JOISTS, LAPS OVER PARTITIONS, FACE NAIL | 3- 16d |
| CEILING JOISTS TO PARALLEL FAFTERS, FACE NAIL | 3- 16d |
| BLOCKING BETWEEN JOISTS OR RAFTERS- | |
| TO JOIST OR RAFTERS - TOE NAILS EACH SIDE, EACH END | 3- 10d |
| TO JOIST OR RAFTER BEARINGS - TOE NAILS, EACH SIDE | 3- 10d |
| BLOCKING BETWEEN STUDS, EACH END | 2- 10d TOE NAILS OR FACE NAILS |
| BRIDGING TO JOIST, TOE NAIL EACH END | 2- 10d |
| SILL PLATE TO STUD, END NAIL | 2-16d |
| TOP PLATE TO STUD, END NAIL | 2- 16d |
| STUD TO SILL PLATE, TOE NAIL | 4- 8d |
| DOUBLE STUDS, FACE NAIL | 16d @ 24" o.c. |
| TOP PLATES, LAPS AND INTERSECTIONS, FACE NAIL | 2- 16d |
| DOUBLE TOP PLATES, FACE NAIL | 16d @16" o.c. |
| BUILT-UP CORNER STUDS | 16d @ 24" o.c. |
| RIBBONS TO STUDS | |
| ONE (1) INCH RIBBONS | 2- 8d |
| TWO (2) INCH RIBBONS | 2- 16d |
| CONTINUOUS HEADER, TWO PIECES | 16d @ 16" o.c. ALONG EA. EDGE |
| CONTUNUOUS HEADER TO STUD, TOE NAIL | 4- 8d |
| SILL PLATE TO JOIST OR BLOCKING, TYP FACE NAIL | 16d @16" o.c. |
| SILL PLATE TO JOIST OR BLOCKING, AT BRACED WALL PANELS | 3-16d @ 16" o.c. |

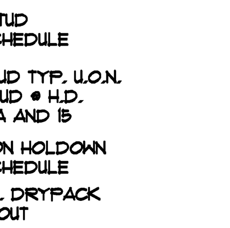


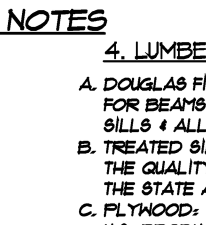


IDENTIFICATION STAMP
DIV. OF THE STATE ARCHITECT
OFFICE OF REGULATION SERVICES
APPL 04-107199
AC ____ FLS ____ SS ____
DATE ____

THOMPSON & ASSOCIATES
STRUCTURAL ENGINEERS
2122 E. WALNUT STREET
PASADENA, CALIFORNIA 91107
PH (626)449-2970
FAX (626)449-4551

REVISIONS

P S W C GROUP
ARCHITECTS / PLANNERS
1887 BUSINESS CENTER DR., SUITE 3, SAN BERNARDINO, CA. 92408
909/890-2233 FAX. 909/890-2844

ROOSEVELT II
ELEMENTARY SCHOOL
SAN BERNARDINO CITY UNIFIED SCHOOL DISTRICT
1261 W. 16TH STREET, SAN BERNARDINO, CA.

GENERAL NOTES AND TYPICAL DETAILS

JOB NO.
DRAWN BY
DATE

S1.0

RE-BID #F09-02 ROOSEVELT II (HENRY) E.S. NEW CONSTRUCTION BID ISSUANCE SET 12/09/11

Z:\CURRENT\SAN BERNARDINO SCHOOLS\14-0501 - ALESSANDERO & ROOSEVELT\ACAD\ROOSEVELT\S1-0.dwg 12-07-11-8:33 AM