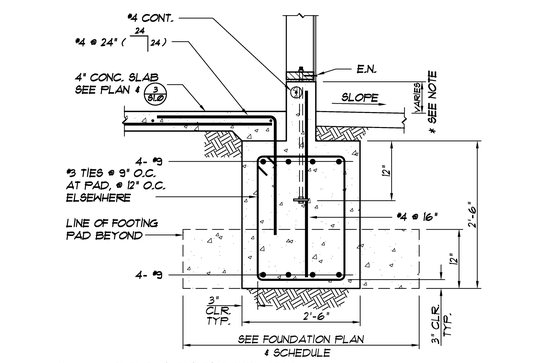

NOTE : AS PER CALIF BUILDING CODE 2306 A.4
* - 6" MIN REQUIRED FOR PAVED SURFACE OR CONCRETE EXCEED 18" WIDE
* - 12" MIN REQUIRED FOR EARTH OR DIRTS

SECTION SCALE: 1" = 1'-0" A S3.1

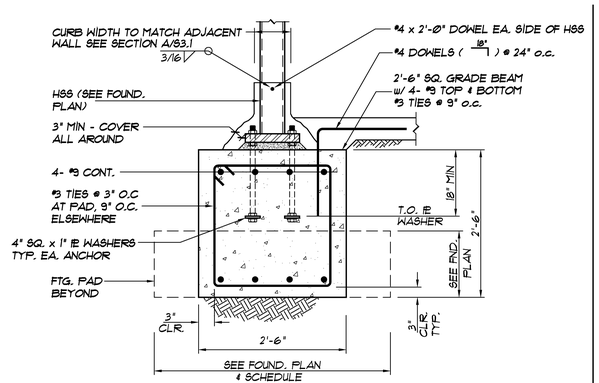

SECTION SCALE: 1" = 1'-0" B S3.1

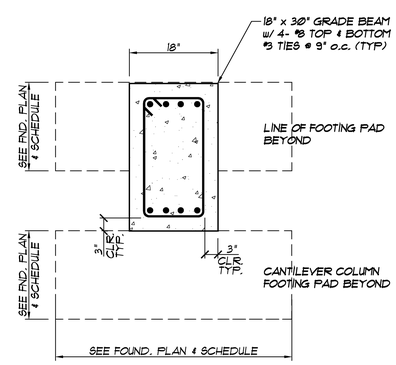

SECTION SCALE: 1" = 1'-0" C S3.1

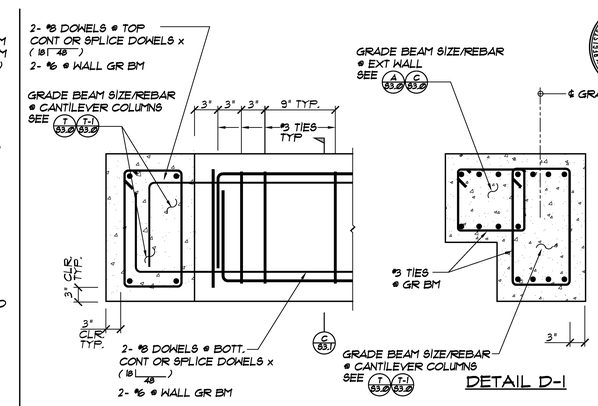

DETAIL D-1

SECTION SCALE: 3/4" = 1'-0" D S3.1 D-1 S3.1

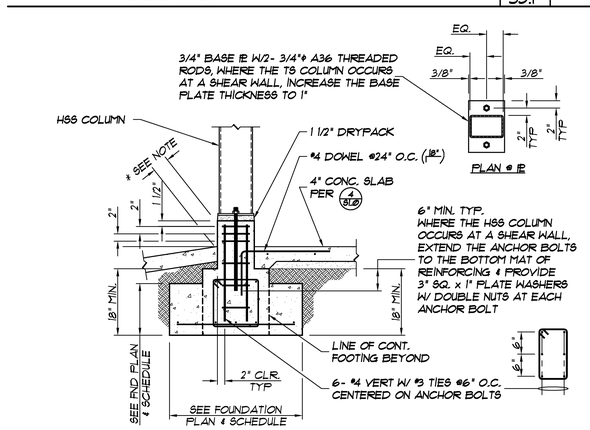

NOTE : AS PER CALIF BUILDING CODE 2306 A.4
* - 6" MIN REQUIRED FOR PAVED SURFACE OR CONCRETE EXCEED 18" WIDE
* - 12" MIN REQUIRED FOR EARTH OR DIRTS

SECTION SCALE: 3/4" = 1'-0" E S3.1

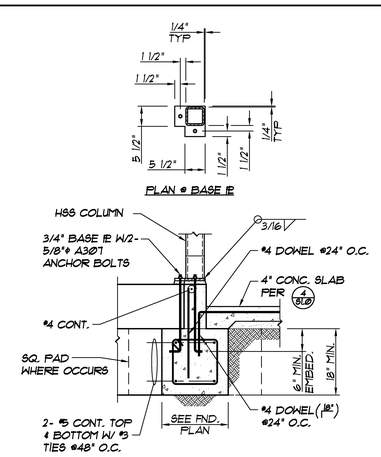

SECTION SCALE: 3/4" = 1'-0" F S3.1

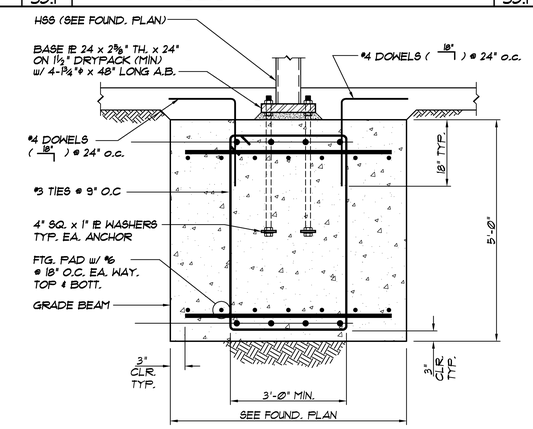

SECTION SCALE: 3/4" = 1'-0" G S3.1

NOT USED H S3.1

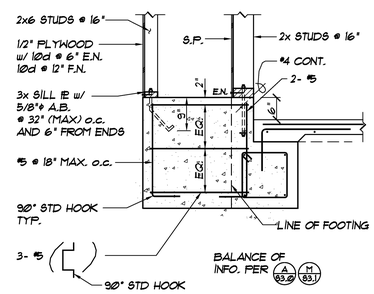

SECTION SCALE: 3/4" = 1'-0" J S3.1

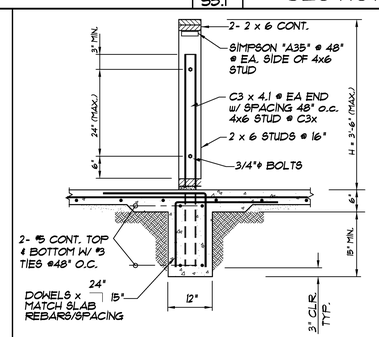

DETAIL SCALE: 3/4" = 1'-0" K S3.1

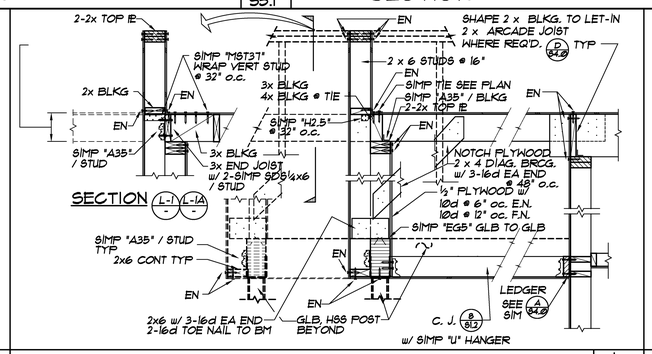

SECTION SCALE: 3/4" = 1'-0" L S3.1

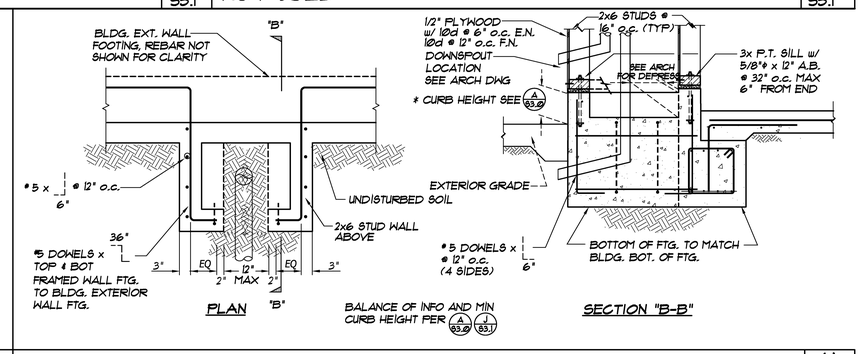

CONCEALED FRAME WALL AND FTG. DETAIL SCALE: 3/4" = 1'-0" M S3.1

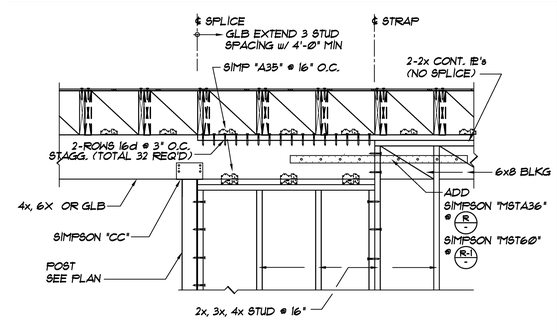

DETAIL SCALE: 3/4" = 1'-0" R S3.1 R-1 S3.1

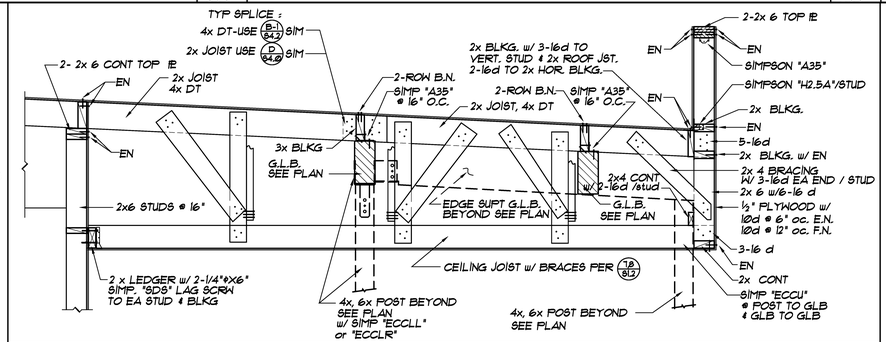

SECTION SCALE: 3/4" = 1'-0" N S3.1

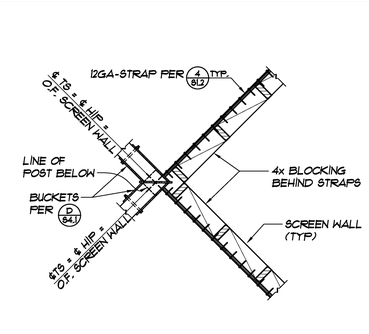

PLAN SCALE: 3/4" = 1'-0" P S3.1

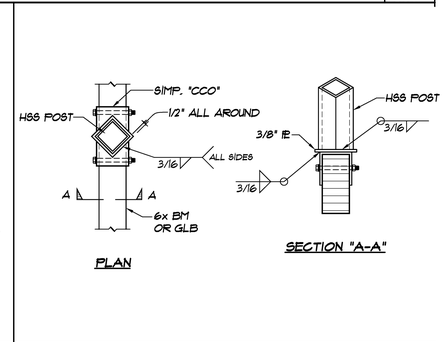

SECTION SCALE: 1" = 1'-0" Q S3.1

PSWC GROUP
ARCHITECTS / PLANNERS
1897 BUSINESS CENTER DR., SUITE 3, SAN BERNARDINO, CA. 92408
909/890-2253 FAX. 909/890-2644

JAMES R. THOMPSON REGISTERED PROFESSIONAL ENGINEER C19098 RENEWAL 06/30/13 STRUCTURAL STATE OF CALIFORNIA

REGISTRATION STAMP DIV. OF THE STATE ARCHITECT OFFICE OF STRUCTURAL SAFETY APPL. 04-107199 AC. FS. SS. DATE.

THOMPSON & ASSOCIATES STRUCTURAL ENGINEERS
6162 ST. WALNUT STREET PASADENA, CALIFORNIA 91107
PH (626)449-2970 FAX (626)449-4651

ROOSEVT

JOB NO. DRAWN BY DATE

NOTED

S3.1

RE-BID #F09-02 ROOSEVELT II (HENRY) E.S. NEW CONSTRUCTION BID ISSUANCE SET 12/09/11