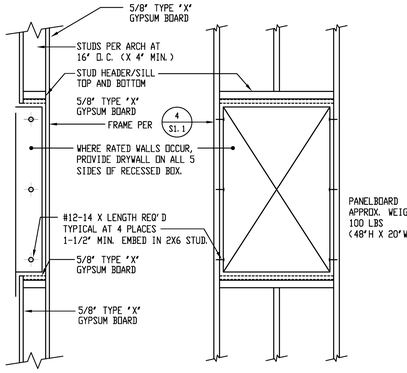

FLUSH MOUNTING PANELBOARD/TERMINAL CABINET ANCHORAGE

SCALE: NONE | F

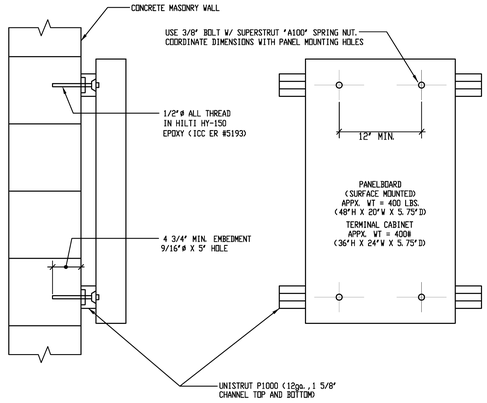

SURFACE MOUNTING EQUIPMENT ANCHORAGE TO CMU

SCALE NONE | C

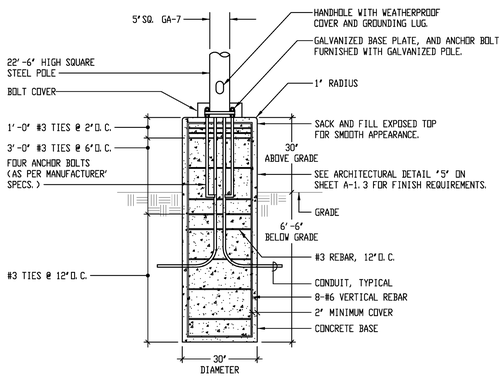

POLE BASE DETAIL

SCALE: NONE | G

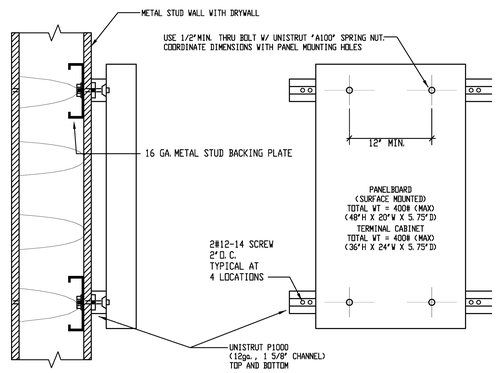

WALL MOUNTED PANEL ANCHORAGE DETAIL

SCALE: NONE | D

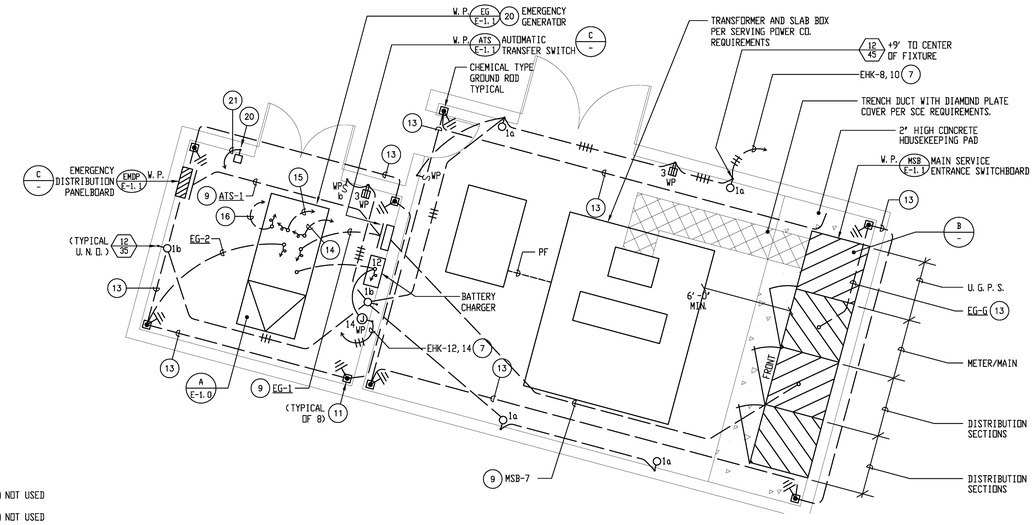

1. NOT USED
2. NOT USED
3. NOT USED
4. NOT USED
5. NOT USED
6. NOT USED.
7. PROVIDE 3#1O, 1#1O GRD. - 3/4"C.
8. NOT USED
9. REFERENCE SINGLE LINE DIAGRAM FOR FEEDER REQUIREMENTS.
10. NOT USED.
11. PROVIDE 12"SQ. X 12"D. FLUSH BOTTOMLESS CONCRETE PULLBOX WITH PEA-GRAVEL BASE AND 10 FT. LONG CHEMICAL GROUND ROD. MOUNT PULLBOX FLUSH IN GRADE AND ENGRAVE COVER "GROUND". PROVIDE QUANTITY AS REQUIRED TO ACHIEVE 25 OHMS TO GROUND MAXIMUM.
12. NOT USED.
13. PROVIDE 1#4/O - 1"C.
14. PROVIDE 1"C. WITH CONTROL WIRING IN ACCORDANCE WITH EQUIPMENT MANUFACTURERS REQUIREMENTS TO AUTOMATIC TRANSFER SWITCH "ATS".
15. PROVIDE CONNECTION TO GENERATOR BATTERY IN ACCORDANCE WITH EQUIPMENT MANUFACTURERS REQUIREMENTS. PROVIDE 1"C. WITH CONTROL WIRING TO BATTERY CHARGER. CONNECT AS REQUIRED.
16. PROVIDE 2"C. WITH GENERATOR CONTROL WIRING TO REMOTE ANNUNCIATOR PANEL.
17. REMOTE GENERATOR STATUS PANEL LOCATED IN RECEPTION ROOM #1. VERIFY EXACT LOCATION WITH ARCHITECT PRIOR TO ROUGH-IN.
18. NOT USED.
19. NOT USED.
20. EMERGENCY GENERATOR BREAK GLASS STATION.
21. PROVIDE 3/4"C. WITH CONTROL WIRING IN ACCORDANCE WITH EQUIPMENT MANUFACTURERS REQUIREMENTS TO EMERGENCY GENERATOR PANEL.

OUTDOOR ELECTRICAL ENCLOSURE DETAIL

SCALE: 1/4"=1'-0" | A

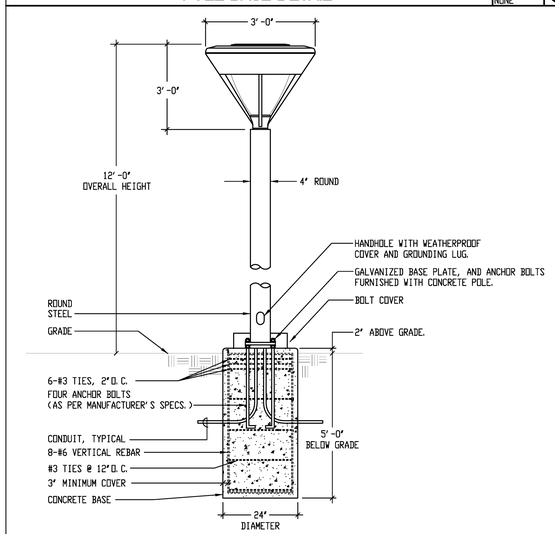

POLE BASE DETAIL

SCALE: NONE | H

TRANSFORMER:
AXMR: 620 LBS. (37"H. X 30"W. X 24"D.)
BXMR: 585 LBS. (37"H. X 30"W. X 20"D.)
DXMR: 585 LBS. (37"H. X 30"W. X 20"D.)
EXMR: 585 LBS. (37"H. X 30"W. X 20"D.)
FXMR: 585 LBS. (37"H. X 30"W. X 20"D.)
KXMR: 835 LBS. (43.75"H. X 32"W. X 27"D.)

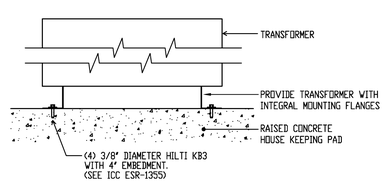

TRANSFORMER ANCHORAGE DETAIL

SCALE: NONE | E

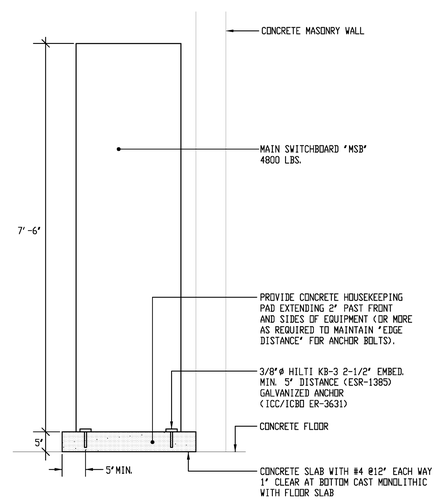

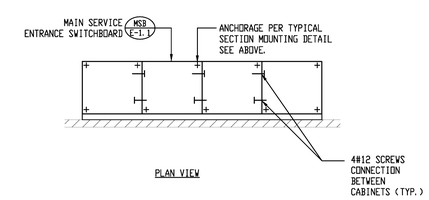

SWITCHBOARD ANCHORAGE DETAIL

SCALE: 1/4"=1'-0" | B

LICENSED ARCHITECT JAMES M. STUCKY C19098 RENEWAL 02/28/ STATE OF CALIFORNIA

REGISTERED PROFESSIONAL ENGINEER STEPHEN R. ZAJAC No. E 10272 Exp. 06-30-12 ELECTRICAL STATE OF CALIFORNIA

FBA Engineering
Consulting Electrical Engineers
3420 Tyler Avenue, Suite 200
El Monte, California 91731
TEL: 626 448 6600 FAX: 626 448 5287
EMAIL: info@fbaengineering.net
FBA # 270.082

REVISIONS	DATE
1	- - - - - -
2	- - - - - -
3	- - - - - -
4	- - - - - -
5	- - - - - -
6	- - - - - -

P S W C GROUP
ARCHITECTS / PLANNERS
1897 BUSINESS CENTER DR., SUITE 3, SAN BERNARDINO, CA. 92408
909/890-2233 FAX. 909/890-2844

ROOSEVELT II ELEMENTARY SCHOOL
SAN BERNARDINO CITY UNIFIED SCHOOL DISTRICT
1281 W. 16TH STREET, SAN BERNARDINO, CA.

DETAILS

JOB NO. P5620
DRAWN BY FBA
DATE 12/8/2011

E-1.2

RE-BID #F09-02 ROOSEVELT II (HENRY) E.S. NEW CONSTRUCTION BID ISSUANCE SET 12/09/11