SEE SHEET A-7.1
FOR SYMBOLS LEGEND

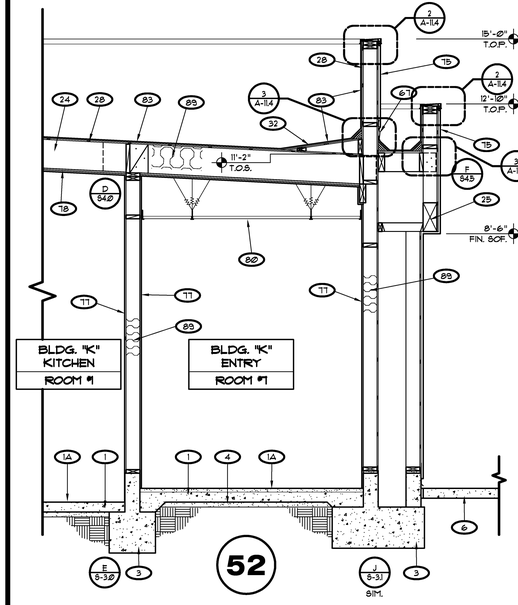

52

BLDG. SECT. C/A-K4
BUILDING "K"

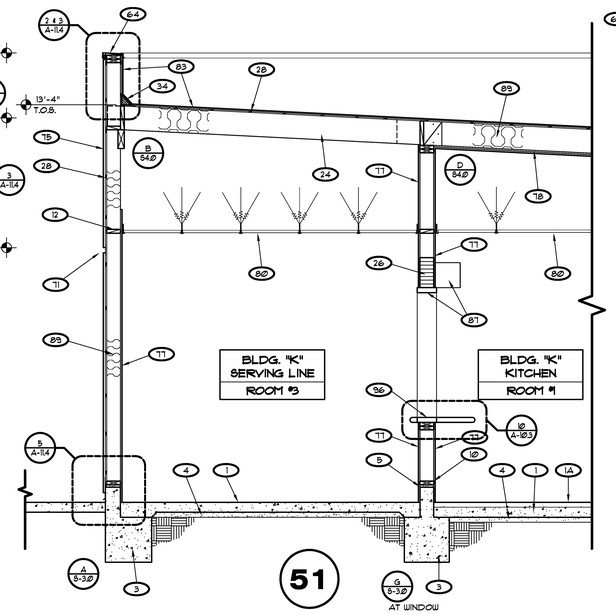

51

BLDG. SECT. B/A-K4
BUILDING "K"

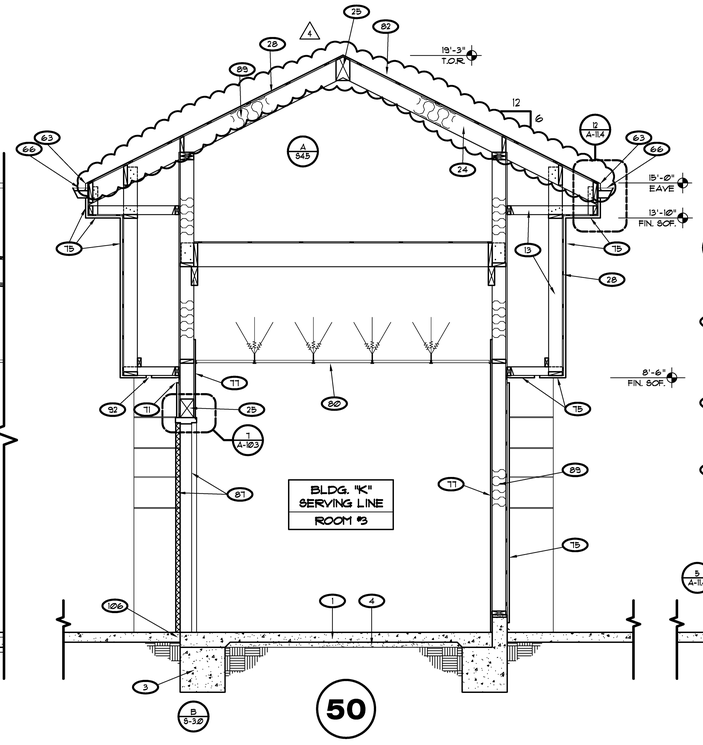

50

BLDG. SECT. A/A-K4
BUILDING "K"

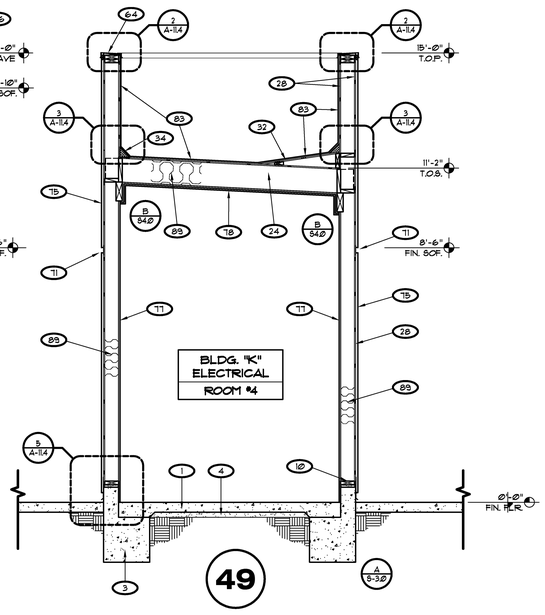

49

BLDG. SECT. A/A-K4
BUILDING "K"

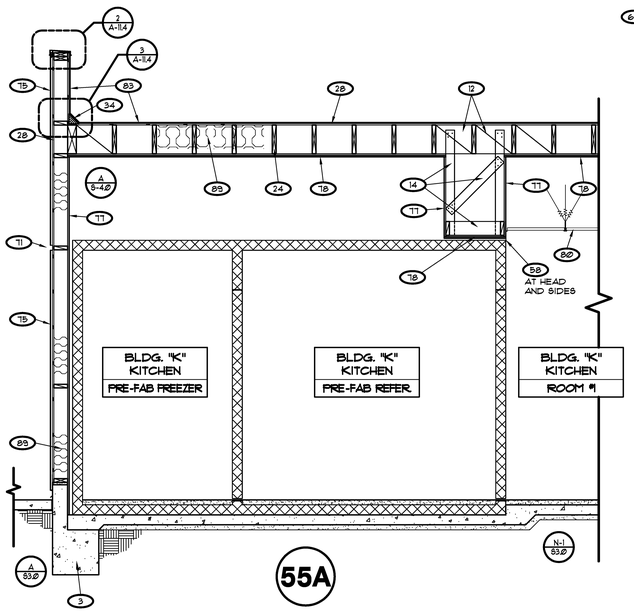

55A

BLDG. SECT. 55A/A-K4
BUILDING "K"

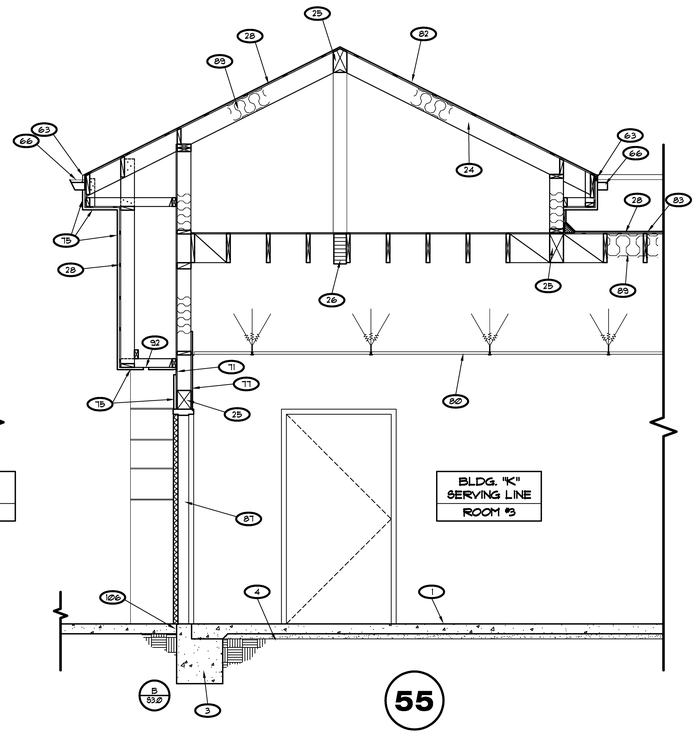

55

BLDG. SECT. E/A-K4
BUILDING "K"

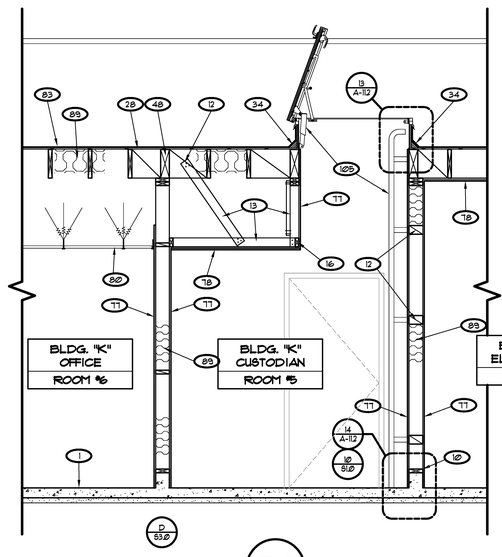

54

BLDG. SECT. D/A-K4
BUILDING "K"

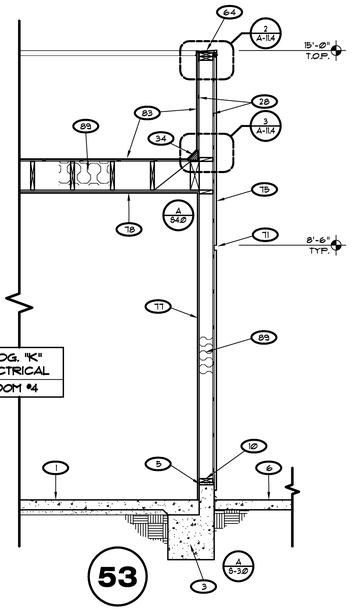

53

BLDG. SECT. D/A-K4
BUILDING "K"

LICENSED ARCHITECT
LARRY M. SUTTON
C19098
RENEWAL 03/29/
STATE OF CALIFORNIA

REVISIONS	DATE

P S W C GROUP
ARCHITECTS / PLANNERS
1867 BUSINESS CENTER DR., SUITE 3, SAN BERNARDINO, CA. 92408
909/890-2223 FAX. 909/890-2844

ROOSEVELT II
ELEMENTARY SCHOOL
SAN BERNARDINO CITY UNIFIED SCHOOL DISTRICT
1261 W. 40TH STREET, SAN BERNARDINO, CA.

WALL SECTIONS

SCALE: 1/8" = 1'-0"

JOB NO. P920
DRAWN BY
DATE 0/7/2011

A-7.9

RE-BID #F09-02 ROOSEVELT II (HENRY) E.S. NEW CONSTRUCTION BID ISSUANCE SET 12/09/11