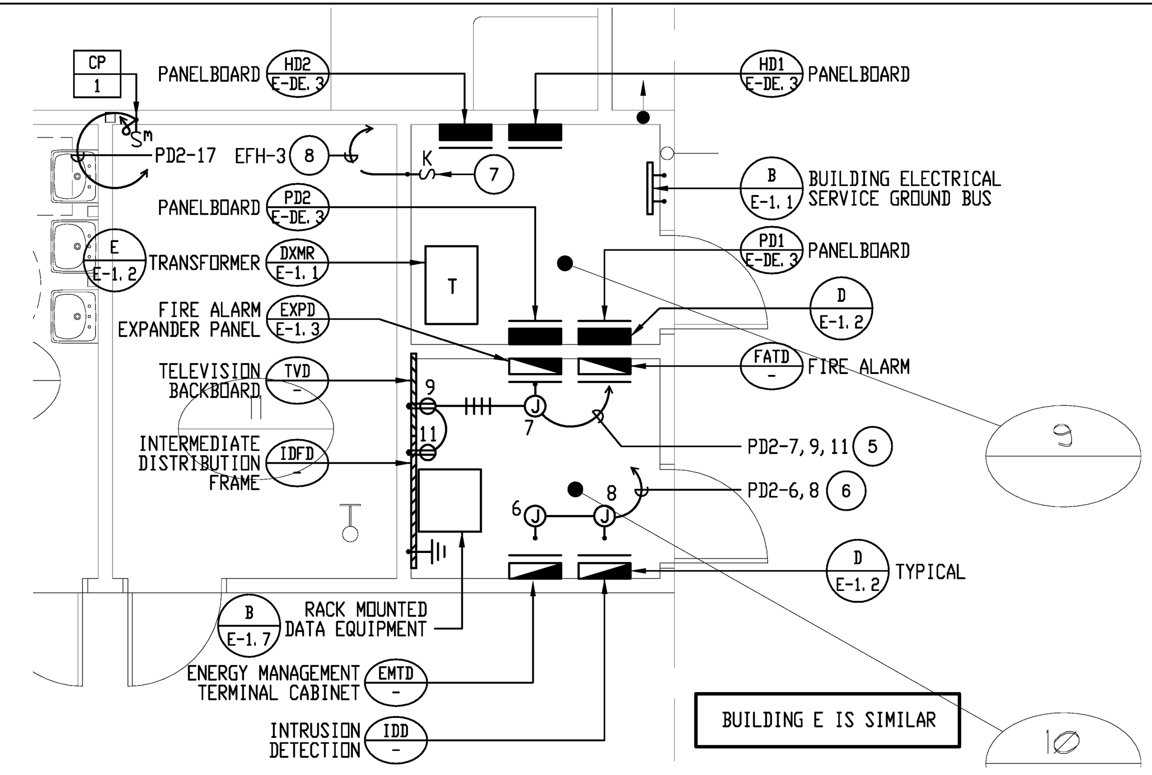

ENLARGED ELECTRICAL ROOMS

A

BUILDING "E" TYPICAL — SCALE: 1/8"=1'-0"

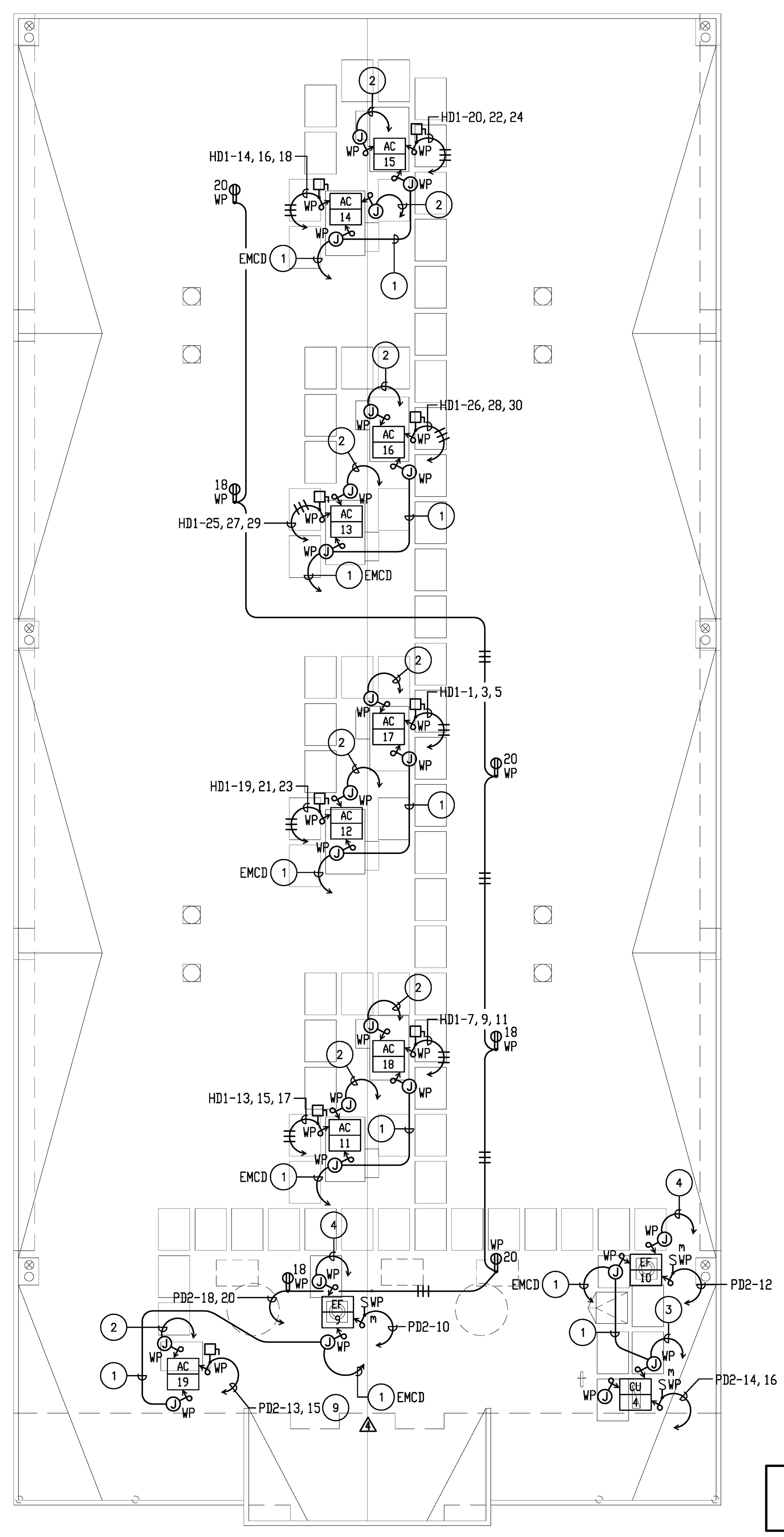

POWER AND CONTROL CONDUITS FOR HVAC UNITS SHALL ROUTE THROUGH CURB, INSIDE UNIT.

BUILDING E IS TO BE CONSTRUCTED TO MATCH BUILDING D.

ROOF ELECTRICAL PLAN

B

BUILDING "E" TYPICAL — SCALE: 1/8"=1'-0"

Filename: I:\270\032\E-DE.3.dwg (jmusick)
Dimscale: 1=1(PS) Date: DEC 07, 2011 Time: 1:42 PM
Xrefs: X-KEYPLAN-ROOSEVELT, X-Base-CLASS-DE-ROOF, X-Base-CLASS-DE, TITLEBLOCK

TYPICAL FOR HE1

ROOSEVELT — PROJECT NO. 270.032
VOLTS 277/480, PHASE 3PH, 4W, MTG SURFACE — PANELBOARD HD1 — LOCATION ELECT. ROOM #9 — MAIN 400A/3P, BUS 400A

CKT	A	B	C	LOAD TYPE	BKR	OUTLET QUAN	DESCRIPTION	PH	CKT	A	B	C	LOAD TYPE	BKR	OUTLET QUAN	DESCRIPTION
1	2936	-----	-----	M1	20/3	1	AC-17	A	2	4988	-----	-----	L	100/3	1	'HD2 SUBFEED'
3	-----	2936	-----	M1	--	-	---------	B	4	-----	4356	-----	L	--	-	---------
5	-----	-----	2936	M1	--	-	---------	C	6	-----	-----	2604	L	--	-	---------
7	2936	-----	-----	M1	20/3	1	AC-18	A	8	20540	-----	-----	G	175/3	1	TRANSFORMER
9	-----	2936	-----	M1	--	-	---------	B	10	-----	15756	-----	G	--	-	'DXMR SUBFEED'
11	-----	-----	2936	M1	--	-	---------	C	12	-----	-----	17096	G	--	-	---------
13	2936	-----	-----	M1	20/3	1	AC-11	A	14	2936	-----	-----	M1	20/3	1	AC-14
15	-----	2936	-----	M1	--	-	---------	B	16	-----	2936	-----	M1	--	-	---------
17	-----	-----	2936	M1	--	-	---------	C	18	-----	-----	2936	M1	--	-	---------
19	2936	-----	-----	M1	20/3	1	AC-12	A	20	2936	-----	-----	M1	20/3	1	AC-15
21	-----	2936	-----	M1	--	-	---------	B	22	-----	2936	-----	M1	--	-	---------
23	-----	-----	2936	M1	--	-	---------	C	24	-----	-----	2936	M1	--	-	---------
25	2936	-----	-----	M1	20/3	1	AC-13	A	26	2936	-----	-----	M1	20/3	1	AC-16
27	-----	2936	-----	M1	--	-	---------	B	28	-----	2936	-----	M1	--	-	---------
29	-----	-----	2936	M1	--	-	---------	C	30	-----	-----	2936	M1	--	-	---------
31		-----	-----		20/1		SPARE	A	32		-----	-----		20/1		SPARE
33	-----		-----		20/1		SPARE	B	34	-----		-----		20/1		SPARE
35	-----	-----			20/1		SPARE	C	36	-----	-----			20/1		SPARE
37		-----	-----				PROVISION	A	38		-----	-----				PROVISION
39	-----		-----				PROVISION	B	40	-----		-----				PROVISION
41	-----	-----					PROVISION	C	42	-----	-----					PROVISION

CONNECTED: VA AMPS
PHASE A = 49016 177
PHASE B = 43600 157
PHASE C = 43188 156
TOTAL =135804 163

L.C.L. @ 125% = 103015
RECEPT. (> 10 kVA @ 50%) = 0
KITCHEN @ 65% = 0
OTHER LOAD @ 100% = 53392
TOTAL VA = 156407
TOTAL AMPS = 188

LOAD TYPE:
G - GENERAL (100%) M - MOTOR (100%)
L - L.C.L. (125%) M1 - MOTOR (125%)
R - RECEPTACLE (50%) X - X-RAY (100%)
(10 kVA @ 100%) X1 - X-RAY (50%)
K - KITCHEN (65%)

TYPICAL FOR HE2

ROOSEVELT — PROJECT NO. 270.032
VOLTS 277/480, PHASE 3PH, 4W, MTG SURFACE — PANELBOARD HD2 — LOCATION ELECT. ROOM #9 — MAIN 100A/3P, BUS 100A

CKT	A	B	C	LOAD TYPE	BKR	OUTLET QUAN	DESCRIPTION	PH	CKT	A	B	C	LOAD TYPE	BKR	OUTLET QUAN	DESCRIPTION
1	1302	-----	-----	L	20/1	14	CLASSROOM LTG.	A	2	1302	-----	-----	L	20/1	14	CLASSROOM LTG.
3	-----	1302	-----	L	20/1	14	CLASSROOM LTG.	B	4	-----	1302	-----	L	20/1	14	CLASSROOM LTG.
5	-----	-----	1302	L	20/1	14	CLASSROOM LTG.	C	6	-----	-----	1302	L	20/1	14	CLASSROOM LTG.
7	1302	-----	-----	L	20/1	14	CLASSROOM LTG.	A	8	1082	-----	-----	L	20/1	16	TOILET/UTILITY
9	-----	1302	-----	L	20/1	14	CLASSROOM LTG.	B	10	-----	450	-----	L	20/1	10	X2-EXTERIOR LTG.
11	-----	-----			20/1		SPARE	C	12	-----	-----			20/1		SPARE
13		-----	-----		20/1		SPARE	A	14		-----	-----		20/1		SPARE
15	-----		-----		20/1		SPARE	B	16	-----		-----		20/1		SPARE
17	-----	-----			20/1		SPARE	C	18	-----	-----			20/1		SPARE
19		-----	-----				PROVISION	A	20		-----	-----				PROVISION
21	-----		-----				PROVISION	B	22	-----		-----				PROVISION
23	-----	-----					PROVISION	C	24	-----	-----					PROVISION
25		-----	-----				PROVISION	A	26		-----	-----				PROVISION
27	-----		-----				PROVISION	B	28	-----		-----				PROVISION
29	-----	-----					PROVISION	C	30	-----	-----					PROVISION

CONNECTED: VA AMPS
PHASE A = 4988 18
PHASE B = 4356 16
PHASE C = 2604 9
TOTAL = 11948 14

L.C.L. @ 125% = 14935
RECEPT. (> 10 kVA @ 50%) =
KITCHEN @ 65% =
OTHER LOAD @ 100% =
TOTAL VA = 14935
TOTAL AMPS = 18

LOAD TYPE:
G - GENERAL (100%) M - MOTOR (100%)
L - L.C.L. (125%) M1 - MOTOR (125%)
R - RECEPTACLE (50%) X - X-RAY (100%)
(10 kVA @ 100%) X1 - X-RAY (50%)
K - KITCHEN (65%)

X2- INDICATES CIRCUIT CONTROLLED BY MULTI-POLE RELAY OPERATED BY PHOTOCELL ON/ TIMECLOCK OFF FUNCTION OF THE ENERGY MANAGEMENT SYSTEM. MOUNT RELAYS IN LIGHTING TERMINAL CABINET LCD.

TYPICAL FOR PE1

ROOSEVELT — PROJECT NO. 270.032
VOLTS 120/208, PHASE 3PH, 4W, MTG SURFACE — PANELBOARD PD1 — LOCATION ELECT. ROOM #9 — MAIN 300A/3P, BUS 400A

CKT	A	B	C	LOAD TYPE	BKR	OUTLET QUAN	DESCRIPTION	PH	CKT	A	B	C	LOAD TYPE	BKR	OUTLET QUAN	DESCRIPTION
1	680	-----	-----	R	20/1	2	CLASSROOM RECEPTS.	A	2	680	-----	-----	R	20/1	2	CLASSROOM RECEPTS.
3	-----	680	-----	R	20/1	2	CLASSROOM RECEPTS.	B	4	-----	680	-----	R	20/1	2	CLASSROOM RECEPTS.
5	-----	-----	1680	R	20/1	4	CLASSROOM RECEPTS.	C	6	-----	-----	1680	R	20/1	4	CLASSROOM RECEPTS.
7	1680	-----	-----	R	20/1	4	CLASSROOM RECEPTS.	A	8	1680	-----	-----	R	20/1	4	CLASSROOM RECEPTS.
9	-----	680	-----	R	20/1	2	CLASSROOM RECEPTS.	B	10	-----	680	-----	R	20/1	2	CLASSROOM RECEPTS.
11	-----	-----	680	R	20/1	2	CLASSROOM RECEPTS.	C	12	-----	-----	680	R	20/1	2	CLASSROOM RECEPTS.
13	1680	-----	-----	R	20/1	4	CLASSROOM RECEPTS.	A	14	1680	-----	-----	R	20/1	4	CLASSROOM RECEPTS.
15	-----	1680	-----	R	20/1	4	CLASSROOM RECEPTS.	B	16	-----	1680	-----	R	20/1	4	CLASSROOM RECEPTS.
17	-----	-----	680	R	20/1	2	CLASSROOM RECEPTS.	C	18	-----	-----	680	R	20/1	2	CLASSROOM RECEPTS.
19	680	-----	-----	R	20/1	2	CLASSROOM RECEPTS.	A	20	680	-----	-----	R	20/1	2	CLASSROOM RECEPTS.
21	-----	1680	-----	R	20/1	4	CLASSROOM RECEPTS.	B	22	-----	1680	-----	R	20/1	4	CLASSROOM RECEPTS.
23	-----	-----	1680	R	20/1	4	CLASSROOM RECEPTS.	C	24	-----	-----	1680	R	20/1	4	CLASSROOM RECEPTS.
25	680	-----	-----	R	20/1	2	CLASSROOM RECEPTS.	A	26	680	-----	-----	R	20/1	2	CLASSROOM RECEPTS.
27	-----	680	-----	R	20/1	2	CLASSROOM RECEPTS.	B	28	-----	680	-----	R	20/1	2	CLASSROOM RECEPTS.
29	-----	-----	1680	R	20/1	4	CLASSROOM RECEPTS.	C	30	-----	-----	1680	R	20/1	4	CLASSROOM RECEPTS.
31	1680	-----	-----	R	20/1	4	CLASSROOM RECEPTS.	A	32	1680	-----	-----	R	20/1	4	CLASSROOM RECEPTS.
33	-----		-----		20/1		SPARE	B	34	-----		-----		20/1		SPARE
35	-----	-----			20/1		SPARE	C	36	-----	-----			20/1		SPARE
37		-----	-----		20/1		SPARE	A	38	6380	-----	-----	G	100/3	1	PANELBOARD PD2
39	-----		-----		20/1		SPARE	B	40	-----	5156	-----	G	--	-	---------
41	-----	-----			20/1		SPARE	C	42	-----	-----	4496	G	--	-	---------

CONNECTED: VA AMPS
PHASE A = 20540 171
PHASE B = 15956 133
PHASE C = 17296 144
TOTAL = 53792 149

L.C.L. @ 125% =
RECEPT. (> 10 kVA @ 50%) = 23880
KITCHEN @ 65% =
OTHER LOAD @ 100% = 16032
TOTAL VA = 39912
TOTAL AMPS = 111

LOAD TYPE:
G - GENERAL (100%) M - MOTOR (100%)
L - L.C.L. (125%) M1 - MOTOR (125%)
R - RECEPTACLE (50%) X - X-RAY (100%)
(10 kVA @ 100%) X1 - X-RAY (50%)
K - KITCHEN (65%)

TYPICAL FOR PE2

ROOSEVELT — PROJECT NO. 270.032
VOLTS 120/208, PHASE 3PH, 4W, MTG SURFACE — PANELBOARD PD2 — LOCATION ELECT. ROOM #9 — MAIN L.O., BUS 225A

CKT	A	B	C	LOAD TYPE	BKR	OUTLET QUAN	DESCRIPTION	PH	CKT	A	B	C	LOAD TYPE	BKR	OUTLET QUAN	DESCRIPTION
1	680	-----	-----	G	20/1	1	HAND DRYERS	A	2	1000	-----	-----	G	20/1	1	HAND DRYERS
3	-----	680	-----	G	20/1	1	HAND DRYERS	B	4	-----	1000	-----	G	20/1	1	HAND DRYERS
5	-----	-----	1680	R	20/1	7	CONV. RECEPTS	C	6	-----	-----	500	G	20/1	1	EMCF
7	1680	-----	-----	G	20/1	1	*FIRE ALARM PANEL	A	8	500	-----	-----	G	20/1	1	IDF
9	-----	680	-----	G	20/1	1	TVF	B	10	-----	506	-----	M1	20/1	1	EF-9
11	-----	-----	680	G	20/1	1	IDFF	C	12	-----	-----	506	M1	20/1	1	EF-10
13	1903	-----	-----	M1	30/2	1	AC-19	A	14	884	-----	-----	M1	20/2	1	CU-4
15	-----	1903	-----	M1	--	-	---------	B	16	-----	884	-----	M1	--	-	---------
17	-----	-----	500	G	20/1	1	CP-1	C	18	-----	-----	360	R	20/1	2	ROOF OUTLETS
19		-----	-----		20/1		SPARE	A	20	360	-----	-----	R	20/1	2	ROOF OUTLETS
21	-----	200	-----	M	20/1	1	COND. PUMP	B	22	-----		-----		20/1		SPARE
23	-----	-----	70	M	15/2	1	FC-1	C	24	-----	-----	200	G	20/1	1	*FSR BELL
25	70	-----	-----	M	--	-	---------	A	26		-----	-----		20/1		SPARE
27	-----		-----				PROVISION	B	28	-----		-----				PROVISION
29	-----	-----					PROVISION	C	30	-----	-----					PROVISION
31		-----	-----				PROVISION	A	32		-----	-----				PROVISION
33	-----		-----				PROVISION	B	34	-----		-----				PROVISION
35	-----	-----					PROVISION	C	36	-----	-----					PROVISION
37		-----	-----				PROVISION	A	38		-----	-----				PROVISION
39	-----		-----				PROVISION	B	40	-----		-----				PROVISION
41	-----	-----					PROVISION	C	42	-----	-----					PROVISION

CONNECTED: VA AMPS
PHASE A = 7077 59
PHASE B = 5853 49
PHASE C = 4496 37
TOTAL = 17426 48

L.C.L. @ 125% = 8233
RECEPT. (> 10 kVA @ 50%) = 2400
KITCHEN @ 65% = 0
OTHER LOAD @ 100% = 8440
TOTAL VA = 19073
TOTAL AMPS = 53

LOAD TYPE:
G - GENERAL (100%) M - MOTOR (100%)
L - L.C.L. (125%) M1 - MOTOR (125%)
R - RECEPTACLE (50%) X - X-RAY (100%)
(10 kVA @ 100%) X1 - X-RAY (50%)
K - KITCHEN (65%)

* PROVIDE CIRCUIT BREAKER LOCK-ON DEVICE.

PANEL SCHEDULES FOR BUILDING E ARE SIMILAR

PLAN NOTES:

1. PROVIDE 3/4"C.O. TO 'EMTC'.
2. PROVIDE 3/4"C. FOR CONTROL WIRING DOWN TO THERMOSTAT.
3. PROVIDE 3/4"C. WITH INTERLOCKING CONTROL WIRING DOWN TO RESPECTIVE FAN COIL UNIT.
4. PROVIDE 3/4"C. WITH CONTROL WIRING DOWN TO RESPECTIVE HVAC UNIT.
5. PROVIDE 6#12, 1#12 GRD. - 3/4"C. PROVIDE SEPARATE NEUTRAL CONDUCTORS FOR EACH BRANCH CIRCUIT INDICATED. CONTINUE THE GROUND WIRE THROUGH THE ENTIRE LENGTH OF CIRCUIT.
6. PROVIDE 4#12, 1#12 GRD. - 3/4"C. PROVIDE SEPARATE NEUTRAL CONDUCTORS FOR EACH BRANCH CIRCUIT INDICATED. CONTINUE THE GROUND WIRE THROUGH THE ENTIRE LENGTH OF CIRCUIT.
7. PROVIDE THREE(3) KEY OPERATED SWITCHES UNDER COMMON COVERPLATE FOR DISCONNECTING MEANS OF BUILDING D & E EMERGENCY LIGHTING. SWITCHES AND COVERPLATE SHALL BE RED IN COLOR. ENGRAVE SWITCH COVERPLATE TO READ: 'EMERG. LTG.'
8. PROVIDE 6#12, 1#12 GRD. - 1 1/4"C.
9. PROVIDE 2#10, 1#10 GRD. - 3/4"C.

NOTE:
ELECTRICAL CONNECTIONS, DEVICES, EQUIPMENT, CONDUIT AND WIRE ETC. ARE TYPICAL FOR BUILDING 'E'.

MECHANICAL EQUIPMENT GENERAL NOTES:

1. VERIFY EXACT LOCATION OF MECHANICAL EQUIPMENT WITH MECHANICAL CONTRACTOR PRIOR TO INSTALLATION OF CONDUIT.
2. ALL EQUIPMENT, DEVICES, SAFETY SWITCHES, JUNCTION BOXES CONNECTIONS, ETC. MOUNTED ON THE ROOF OR EXTERIOR SHALL BE WEATHERPROOF.
3. REFER TO MECHANICAL DRAWING CONTROL DIAGRAM FOR ALL SENSORS, TIME CLOCKS, RELAYS, TIMERS, STARTERS, LINE AND LOW VOLTAGE CONDUIT AND PROVIDE AS REQUIRED.
4. SAFETY SWITCHES SHALL BE HORSEPOWER RATED WITH CURRENT LIMITING FUSES, SIZED PER THE MANUFACTURER'S RECOMMENDATION. SWITCHES SHALL HAVE 'RK-1' FUSE REJECTION CLIPS.
5. ELECTRICAL PLANS DO NOT INDICATE MECHANICAL AND PLUMBING EQUIPMENT CONTROL. REFER TO MECHANICAL AND PLUMBING PLANS AND SPECIFICATIONS AND PROVIDE ALL CONDUIT, WIRE, J-BOXES, OUTLET BOXES, RELAY SWITCHES, TIMESWITCHES, CONTROL CIRCUITS, ETC. REQUIRED FOR A COMPLETE AND OPERABLE MECHANICAL AND PLUMBING INSTALLATION. ALL WIRE SHALL BE INSTALLED IN CODE SIZED CONDUIT.
6. LOCATIONS OF SAFETY SWITCHES AND CONNECTIONS FOR MECHANICAL AND PLUBING EQUIPMENT ARE SHOWN DIAGRAMMATICALLY. VERIFY ACTUAL LOCATIONS WITH EQUIPMENT SHOP DRAWINGS AND LOCATE SAFETY SWITCHES LOCATED TO PROVIDE CODE REQUIRED CLEARANCES AND ACCESS. SAFETY SWITCHES LOCATED ON THE ROOF SHALL BE MOUNTED 30" MINIMUM ABOVE THE ROOF. IF THE MOUNTING OF SWITCHES DIRECTLY TO MECHANICAL EQUIPMENT IS NOT POSSIBLE, PROVIDE ANGLE IRON SUPPORT BRACKETS BOLTED TO THE ROOF FRAMING.

ROOM TITLES

● ONE-HOUR SEPARATION

1. CLASSROOM
2. CLASSROOM
3. CLASSROOM
4. CLASSROOM
5. CLASSROOM
6. CLASSROOM
7. CLASSROOM
8. CLASSROOM
9. ● DATA ROOM
10. ● ELECTRICAL
11. ● STORAGE
12. BOYS TOILET
13. GIRLS TOILET
14. RSP

KEYPLAN

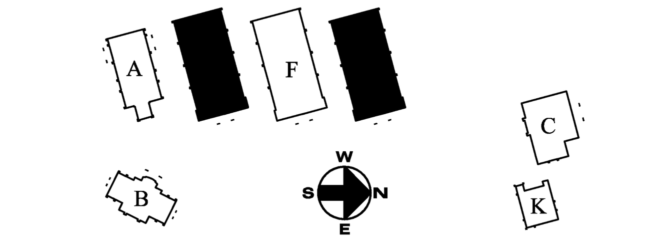

LICENSED ARCHITECT JAMES M. STINSON C19098 RENEWAL 02/28/ STATE OF CALIFORNIA

REGISTERED PROFESSIONAL ENGINEER STEPHEN R. ZAJICEK No. E 10372 Exp. 09-30-12 ELECTRICAL STATE OF CALIFORNIA

FBA Engineering
Consulting Electrical Engineers
3420 Irvine Avenue Suite 200
Newport Beach, California 92660-3189
TEL: 949 852 9995 FAX: 949 852 1657
EMAIL: fba@fbaengineering.net
FBA # 270.032

REVISIONS | DATE

P S W C GROUP
ARCHITECTS / PLANNERS
1887 BUSINESS CENTER DR., SUITE 3, SAN BERNARDINO, CA. 92408
909/890-2233 FAX. 909/890-2644

ROOSEVELT II
ELEMENTARY SCHOOL
SAN BERNARDINO CITY UNIFIED SCHOOL DISTRICT
1261 W. 16TH STREET, SAN BEERNARDINO, CA.

BUILDING D & E
ROOF PLAN, ENLARGED ELEC. ROOMS & PANEL SCHEDULES

JOB NO. P520
DRAWN BY FBA
DATE 12/8/2011

E-DE.3

RE-BID #F09-02 ROOSEVELT II (HENRY) E.S. NEW CONSTRUCTION BID ISSUANCE SET 12/09/11