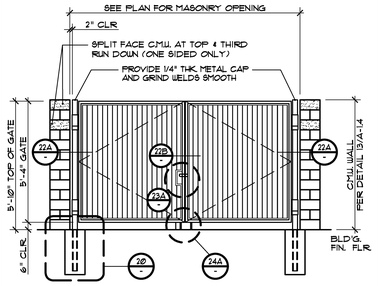

21 TRASH ENCLOSURE GATE 1/4"=1'-0"

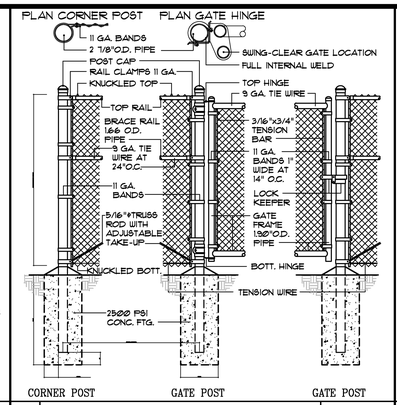

17 CHAIN LINK FENCE & GATE N.T.S.

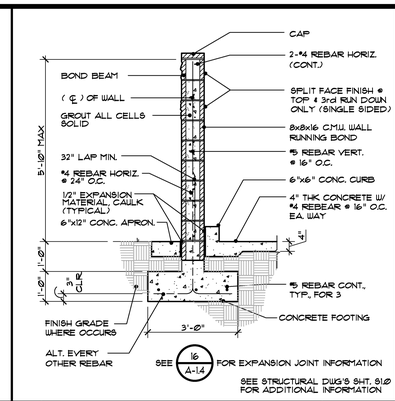

13 8" C.M.U. TRASH ENCLOSURE 1/2"=1'-0"

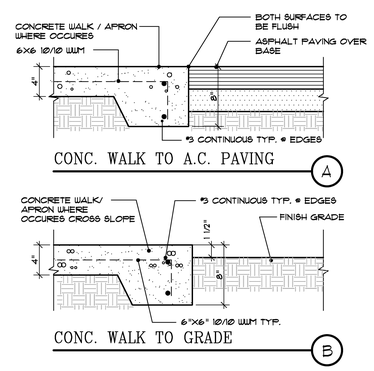

9 CONCRETE WALK DETAILS 1 1/2"=1'-0"

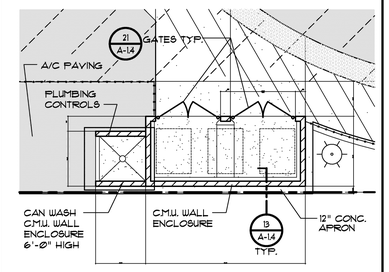

5 TRASH ENCLOSURE 1/8"=1'-0"

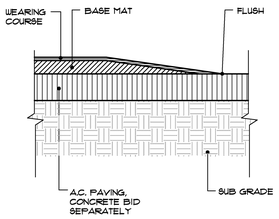

1 RUBBER SAFETY SURFACE 1"=1'-0"

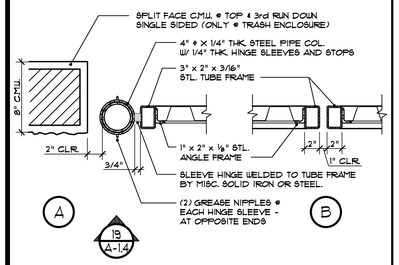

22 JAMB CONNECTION 1 1/2"=1'-0"

18 – N.T.S.

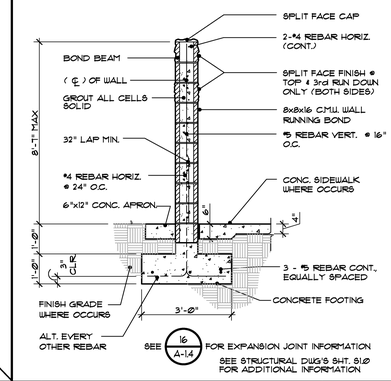

14 SCREEN WALL 1/2"=1'-0"

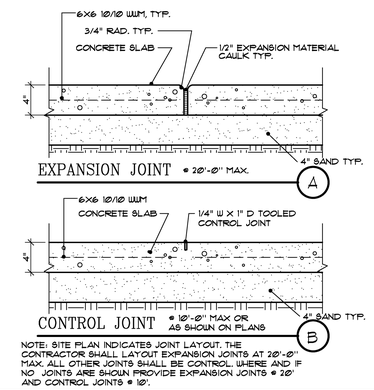

10 CONCRETE WALK DETAILS 1 1/2"=1'-0"

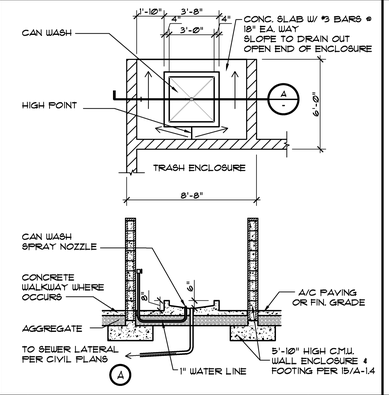

6 CAN WASH ENCLOSURE 1/4"=1'-0"

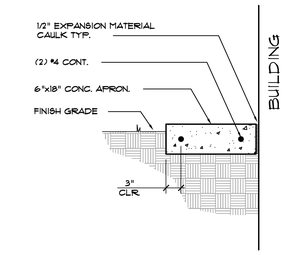

2 CONCRETE APRON 1" = 1'-0"

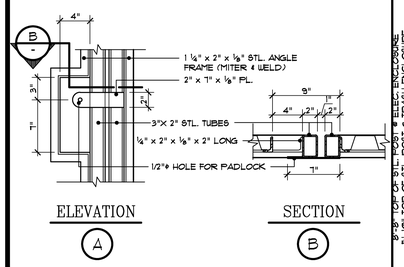

23 LATCH DETAIL 1 1/2"=1'-0"

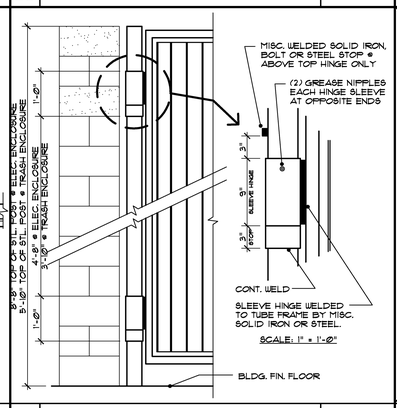

19 GATE HINGE DETAIL 3/4"=1'-0"

15 – –

11 – –

7 – –

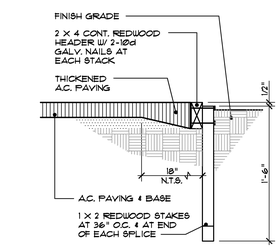

3 REDWOOD HEADER 1 1/2"=1'-0"

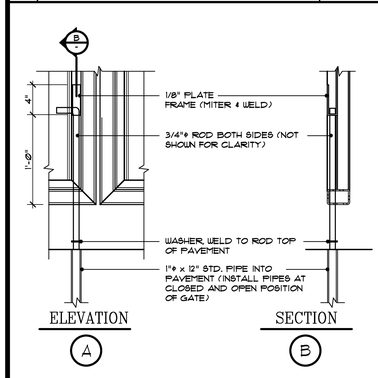

24 GATE STOPPER 1 1/2"=1'-0"

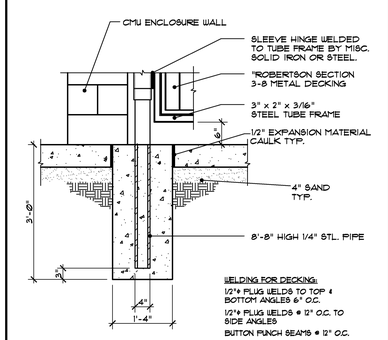

20 GATE FOOTING DETAIL 3/4"=1'-0"

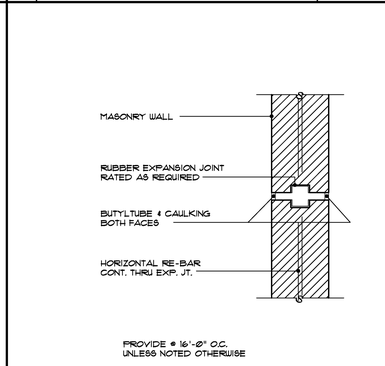

16 EXPANSION JOINT 1 1/2"=1'-0"

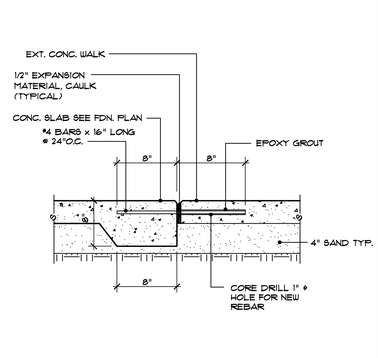

12 CONCRETE WALK JOINT 1 1/2"=1'-0"

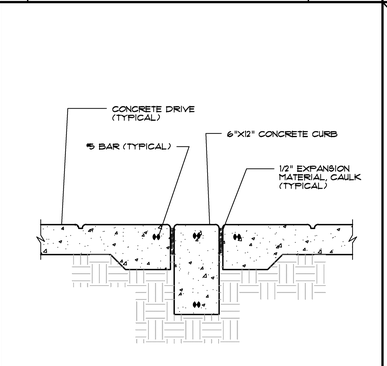

8 CURB AT DRIVEWAY N.T.S.

4 – –

STEVEN M. SPANGLER ARCHITECT C19096 RENEWAL 02/28/13 STATE OF CALIFORNIA

REVISIONS	DATE
1	

P S W C GROUP
ARCHITECTS / PLANNERS
1867 BUSINESS CENTER DR., SUITE 3, SAN BERNARDINO, CA. 92408
909/890-2833 FAX: 909/890-2844

ROOSEVELT II ELEMENTARY SCHOOL
SAN BERNARDINO CITY UNIFIED SCHOOL DISTRICT
1261 W. 16TH STREET, SAN BERNARDINO, CA.

NEW SITE DETAILS

SCALE: AS SHOWN

JOB NO. PS20
DRAWN BY
DATE 6/7/2011

A-1.4

RE-BID #F09-02 ROOSEVELT II (HENRY) E.S. NEW CONSTRUCTION BID ISSUANCE SET 12/09/11