RE-BID #F09-02 ROOSEVELT II (HENRY) E.S. NEW CONSTRUCTION BID ISSUANCE SET 12/09/11

TESTING AND INPECTION REQUIREMENTS FOR SCHOOL CONSTRUCTION

TESTS

The Owner will select an independent DSA certified testing laboratory to conduct the tests. Selection of the material required to be tested shall be by the laboratory of the Owner's representative and not by the Contractor.

The Contractor shall notify the Owner's representative a sufficient time in advance fo the manufacture of material to be supplied by him under the Contract Documents, which must by terms of the Contract be tested, in order that the Owner may arrange for the testing of same at the source of supply.

Any material shipped by the Contractor from the source of supply prior to having satisfactorily passed such testing and inspection prior to the receipt of notice from said representative that such testing and inspection will not be required shall not be incorporated in the job.

The Owner shall pay testing laboratory costs for all tests and inspections, but may be reimbursed by the Contractor for such costs under the Contract documents.

TEST REPORTS

One copy of all test reprts shall be forwarded to the Division of the State Architect by the testing agency. Such reports shall include all the tests made regardless of whether such tests indicate that the material is satisfactory or unsatisfactory. Samples taken but not tested shall also be reported. Records of special sampling operations as required shall also be reported. The reports shall show that the material of materials were sampled and tested in accordance with requirements of Title 24 and with the approved specifications. Test reports shall show the specified design strength. This shall also state definitely whether or not the material or materials tested comply with requirements.

NOTIFICATION OF CONSTRUCTION

The architect or structural engineer of record shall submit form for 102 notification of strarting construction to the Division of the State Architects

VERIFIED REPORTS

Each testing agency shall submit the to structural engineer of record, project inspector and the Division of the State Architect a verified report in duplicate covering all the tests which are required to be made by that agency during the progress of the project. Such report shall be furnished each time that work on the project is suspended, covering the tests up to that time, and at the completion of the project, covering all tests.

INSPECTION OF THE OWNERS

The Owner and his representatives shall at all times have access for the purpose of Inspection to all parts of the work and to the shops wherein the work is in preparation, and the Contractor shall at all times maintain proper facilities and provide safe access for such inspection.

TESTING AND INSPECTION

The Owner shall have the right to reject materials and workmanship which are defective, or to require their correction. Rejected workmanship shall be satisfactorily corrected and rejected material shall be removed from the premises without charge to the Owner. If the Contractor does not correct such rejected work within a reasonable time, fixed by written notice, the Owner may correct same and charge the expense to the Contractor

Should it be considered necessary or advisable by the Owner at any time before final acceptance of the entire work to make an examination of the work already completed by removing or tearing out the same, the Contractor shall on request promptly furnish all necessary facilities, labor and materials. If such work is found to be defective in any respect due to the fault of the Contractor or his subcontractor, he shall defray all expenses of such examinations and of satisfactory reconstruction. If, however, such work is found to meet the requirements of the Contract, the additional cost of labor and material necessarily involved in the examination and replacement shall be allowed the Contractor.

INSPECTOR - OWNER'S

A DSA certified inspector employed by the Owner in accordance with the requirements of the California Code of Regulations, Title 24, will be assigned to the work. His duties are specifically defined it Title 24, Part I, Sec. 4-342. An inspector approved form sss-5 shall be sumitted to the Division of State Architect

The work of construction in all stages of progress shall be subject to the personal continuous observation of the Inspector. He shall have free access to any or all parts of the work at any time. The Contractor shall furnish the Inspector reasonable facilities for obtaining such information as may be necessary to keep him fully informed respecting the progress and manner of the work and the character of materials. Inspection of the work shall not relieve the Contractor from any obligation to fulfill this Contract.

INSPECTOR - OWNER - FIELD OFFICE

The Contractor shall provide for the use of the Owner's Inspector a temporary office to be located as directed by the Inspector and to be maintained until removal authorized by the Owner. This office shall be of substantial waterproof construction with adequate natural light and ventilation by means of stock design windows. The door shall have a lock. A table satisfactory for the study of plans and two chairs shall be provided by the Contractor. The Contractor shall provide and pay for adequate electric lights, private local telephone service with a loud exterior bell, and adequate heat for this field office until the completion of the Contract.

SCHOOLS AND ESSENTIAL SERVICES BUILDING
TITLE 24, PART 2, CCR
(2000 UBC AND 2001 CALIFORNIA BUILDING CODE)

III. CONCRETE - STATE CHAPTER 19A

A. MATERIALS

1. Portland Cement Tests - 1903 A.2, 1929 A.1
2. Concrete Aggregates - 1903 A.3
4. Reinforcing Bars - 1903 A.5, 1929 A.2
6. Batch Plan Inspection - 1929 A.4
7. Wavier of Batch Plant Inspection and Test - 1929 A.5, 6

B. CONCRETE QUALITY

1. Proportions of Concrete - 1904 A, 1905 A.1 thru 5
2. Strength Tests of Concrete - 1905 A.6

C. CONCRETE INSPECTION

1. Job Site Inspection - 1905 A.7
2. Batch Plant of Weighmaster Inspection - 1929 A.4

TESTING & INSPECTION

C. CONCRETE INSPECTION (ctd.)

5. Reinforcing Bar Welding Inspection - 1929 A.12

IV. STEEL - STATE CHAPTER 22A

A. MATERIALS

1. Structural Steel, Cold Formed Steel - 2202 A.1, 2202 A.2
2. Material Identification - 2203 A

B. INSPECTION AND TEST OF STRUCTURAL STEEL

1. Tests of Structural & Cold Formed Steel - 2231 A.1
2. Test of High Strength Bolts, Nuts, Washers - 2231 A.2
4. Shop Fabrication Inspection - 2231 A.4
5. Welding Inspection - 2231 A.5
7. High Strength Bolt Inspection - 2231 A.6

VI. EXCAVATIONS, FOUNDATIONS & RETAINING WALLS - STATE CHAPTER 18A

A. EARTH FILL COMPACTION - 1802 A

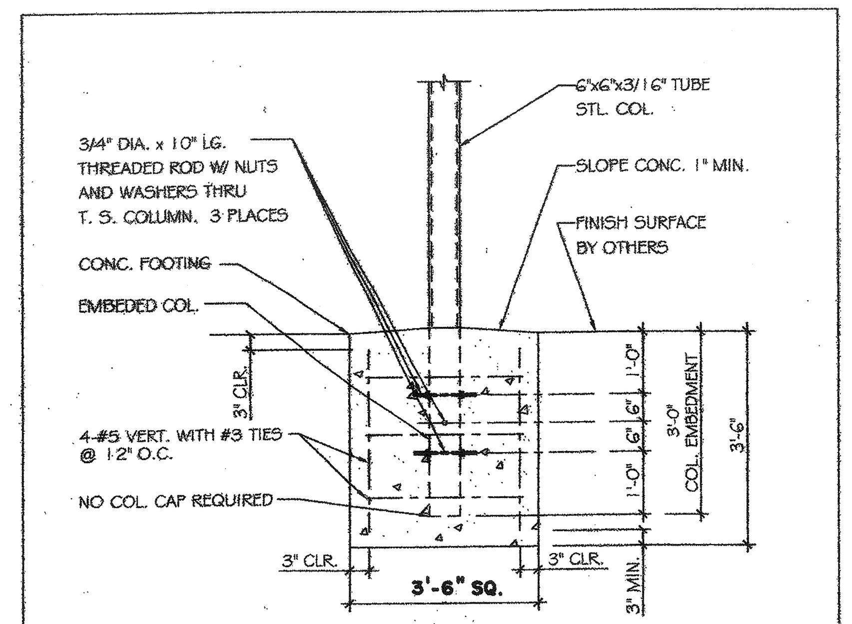

COL. HEIGHT=12'-0"
WIND LOAD = 90 MPH EXPOSURE C
CONCRETE 3000 PSI IN 28 DAYS
NO BATCH PLANT INSPECTION PER 1929 A.4 THRU A.5

SCALE: 1/2"= 1'-0"

CONC. FOOTING DETAIL ALT. 1A

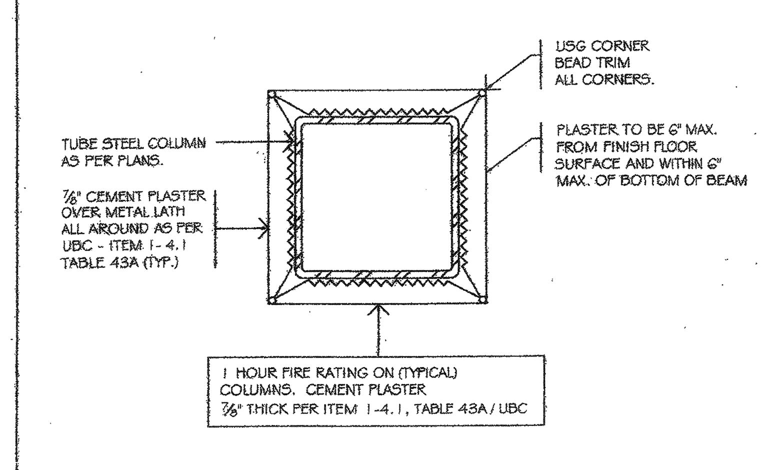

SCALE: NTS.

1-HOUR FIRE RATED COL. DET. 2

STATE OF CALIFORNIA
DEPT. OF GENERAL SERVICES
OFFICE OF THE STATE ARCHITECT

STRUCTURAL TESTS AND INSPECTIONS

SSS 103-1 (R 11/85)

TESTING LABORATORY ________ DATE: ________
NAME ________
DISTRICT/OWNER ________ DISTRICT/OWNER ________
DIVISION__FILE NO. ________
ARCHITECT ________
STRUCTURAL ENGINEER Edmond C. Foerstel SE 957

The following tests and inspections, as checked, will be required as detailed in applicable specifications.

	COMPACTED FILL
x	Fill material, acceptance tests (By Soil Engr.)
x	Compaction control, continuous (By Soil Engr.)
	Compaction tests only as ordered (By Soil Engr.)
x	Bearing campacity of compacted fill (By Soil Engr.)
	REINFORCING STEEL
	Sample and test bar steel
	Sample and test mesh
	Inspect placing at job
	STRUCTURAL STEEL
x	Sample and test as detailed below
	Shop fabrication inspection
	Field erection inspection
x	Inspection of welds - Shop
	Inspection of welds - Field
	Inspection of riveting or bolting - Shop
x	Inspection of riveting or bolting - Field
x	Sample and test high strength bolts & washers
	BRICK AND BLOCK
	Sample and test
	Test only
	Inspection of placing
	Core drill samples
	GLUED LAMINATED STRUCTURAL LUMBER
	Fabrication inspection
	Sample and test steel accessories
	Inspect fabrication of steel accessories

CONCRETE	GUNITE	GROUT	MORTAR	
x				Test of aggregates for mix design only
				Suitability tests of aggregates as designed below
x				Mix designs Method "A"
x				Continuous batch plant inspection (Weight Master Certificate)
x				Inspect placing
				Sample
x				Compression tests
				Pick up samples at job
				Samples delivered to laboratory
				Deliver sample forms to jobsite
				Sample and test cement Mill Certified / Grab Sample

SUITABILITY TESTS	CONCRETE MATERIALS	GUNITE	MORTAR	GROUT
Sodium sulphate				
Structural strength				
Los Angeles rattler				
Clay (Hydrometer method)				
Reactivity tests				
Volume change				

MIX DESIGNS: CONCRETE, GROUT, MORTAR OR GUNITE

MATERIAL	MAXIMUM SIZE	COMPRESSIVE STRENGTH, PSI, MIMIMUM					
		28 Days					
Concrete	1"	3000 P.S.I.					

List of structural steal members to be tested:
All unidentified steel
(Is this list continued on reverse: Yes No)

Other Tests and Inspections, together with special instructions:
Metal deck, inspection of caissons
(Are these instructions continued on reverse: Yes No)

Copies of Reports to:
DSA, IOR ARCH.

By: ________ AUTHORIZED REPRESENTATIVE

CBC 2001

PC

IDENTIFICATION STAMP
DIV OF THE STATE ARCHITECT
APP03- 106802
AC /FLS /SS
DATE APR 16 2003

STRUCTURAL ENGINEER
EDMUND C. FOERSTEL
915 "A" AVENIDA AMANECER
SAN CLEMENTE, CA 92672
PH 949 492-5981
FAX 949 498-3020

NATIONAL CARPORTS, IND.
P.O. BOX 2323
SHERMAN, TX. 75091

GREG. JONES
REGIONAL MANAGER
680 HUNTER PLACE
RENO, NEVADA 89509
PH 775-787-8845
FX 775-787-8846

LICENSED ARCHITECT JAMES MICHAEL STINSON C-19096 STATE OF CALIFORNIA

JOB LOCATION

IDENTIFICATION STAMP
DIV. OF THE STATE ARCHITECT
OFFICE OF REGULATION SERVICES
04 107199
AC FLS SS
DATE DEC 21 2007

CUSTOMER

DRAWN BY	SCHOOL SHADE STRUCTURE	
SCALE		
DATE	STATE OF CALIFORNIA STD. PC 03-106802	SHEET 3 OF SHEETS
APPROVED BY		