FIRE ALARM CONTROL PANEL 'FACP'

DEVICE	STAND-BY CURRENT	ALARM CURRENT
(1) CONTROL UNIT	0.056	0.267
(1) POWER SUPPLY	0.010	0.015
(1) REMOTE ANN.	0.050	0.057
(1) INIT. UNIT	0.027	0.061
(1) NOT UNIT.	0.023	0.068
(135) SMOKE DET.	0.036	0.036
(4) MANUAL PULL.	0.0092	0.0092
(3) W.P. HORN	———	0.120
(8) 15cd	———	0.472
(1) 75cd	———	0.161
(0) 110cd	———	0.000
(4) 15cd H/S	———	0.324
(6) 75cd H/S		0.966
TOTAL	0.2112	2.5562

TOTAL STANDBY CURRENT X 60 HOURS = 0.2112A x 60 HOURS = 12.670 A-HR
TOTAL NEW ALARM CURRENT X 10 MINUTES = 2.556A x 0.167HR = 0.427 A-HR

TOTAL MINIMUM AMPERE - HOUR RATING OF BATTERIES = 13.097 A-HR

NOTES:

1. BATTERY CALCULATION SHALL BE BASED ON A MINIMUM OF 60.0 HOURS STANDBY AND 10 MINUTES ALARM.
2. PROVIDE A MINIMUM OF 20 A-HR OF NEW BATTERY STANDBY POWER.

EXPANDER PANEL 'EXPB'

DEVICE	STAND-BY CURRENT	ALARM CURRENT
(1) CONTROL UNIT	0.060	0.120
(1) W.P. HORN	———	0.040
(1) 15cd	———	0.059
(1) 75cd	———	0.152
(1) 110cd	———	0.191
(0) 15cd H/S	———	0.000
(2) 75cd H/S		0.322
TOTAL	0.060	0.884

TOTAL STANDBY CURRENT X 60 HOURS = 0.060Ax 60 HOURS = 3.600 A-HR
TOTAL NEW ALARM CURRENT X 10 MINUTES = 0.884A x 0.167HR = 0.148 A-HR

TOTAL MINIMUM AMPERE - HOUR RATING OF BATTERIES = 3.748 A-HR

NOTES:

1. BATTERY CALCULATION SHALL BE BASED ON A MINIMUM OF 60.0 HOURS STANDBY AND 10 MINUTES ALARM.
2. PROVIDE A MINIMUM OF 5 A-HR OF NEW BATTERY STANDBY POWER.

EXPANDER PANEL 'EXPK'

DEVICE	STAND-BY CURRENT	ALARM CURRENT
(1) CONTROL UNIT	0.060	0.120
(6) W.P. HORN	———	0.240
(8) 15cd	———	0.472
(0) 75cd	———	0.000
(2) 110cd	———	0.382
(2) 15cd H/S	———	0.162
(2) 75cd H/S		0.322
TOTAL	0.060	1.698

TOTAL STANDBY CURRENT X 60 HOURS = 0.060Ax 60 HOURS = 3.600 A-HR
TOTAL NEW ALARM CURRENT X 10 MINUTES = 1.698A x 0.167HR = 0.284 A-HR

TOTAL MINIMUM AMPERE - HOUR RATING OF BATTERIES = 3.884 A-HR

NOTES:

1. BATTERY CALCULATION SHALL BE BASED ON A MINIMUM OF 60.0 HOURS STANDBY AND 10 MINUTES ALARM.
2. PROVIDE A MINIMUM OF 5 A-HR OF NEW BATTERY STANDBY POWER.

EXPANDER PANEL 'EXPD'

DEVICE	STAND-BY CURRENT	ALARM CURRENT
(1) CONTROL UNIT	0.060	0.120
(4) W.P. HORN	———	0.200
(2) 15cd	———	0.118
(0) 75cd	———	0.000
(0) 110cd	———	0.000
(1) 15cd H/S	———	0.081
(8) 75cd H/S	———	1.288
TOTAL	0.060	1.807

TOTAL STANDBY CURRENT X 60 HOURS = 0.060Ax 60 HOURS = 3.600 A-HR
TOTAL NEW ALARM CURRENT X 10 MINUTES = 1.807A x 0.167HR = 0.302 A-HR

TOTAL MINIMUM AMPERE - HOUR RATING OF BATTERIES = 3.902 A-HR

NOTES:

1. BATTERY CALCULATION SHALL BE BASED ON A MINIMUM OF 60.0 HOURS STANDBY AND 10 MINUTES ALARM.
2. PROVIDE A MINIMUM OF 5 A-HR OF NEW BATTERY STANDBY POWER.

EXPANDER PANEL 'EXPE'

DEVICE	STAND-BY CURRENT	ALARM CURRENT
(1) CONTROL UNIT	0.060	0.120
(4) W.P. HORN	———	0.160
(2) 15cd	———	0.118
(0) 75cd	———	0.000
(0) 110cd	———	0.000
(1) 15cd H/S	———	0.081
(8) 75cd H/S		1.288
TOTAL	0.060	1.767

TOTAL STANDBY CURRENT X 60 HOURS = 0.060Ax 60 HOURS = 3.600 A-HR
TOTAL NEW ALARM CURRENT X 10 MINUTES = 1.767A x 0.167HR = 0.295 A-HR

TOTAL MINIMUM AMPERE - HOUR RATING OF BATTERIES = 3.895 A-HR

NOTES:

1. BATTERY CALCULATION SHALL BE BASED ON A MINIMUM OF 60.0 HOURS STANDBY AND 10 MINUTES ALARM.
2. PROVIDE A MINIMUM OF 5 A-HR OF NEW BATTERY STANDBY POWER.

EXPANDER PANEL 'EXPF'

DEVICE	STAND-BY CURRENT	ALARM CURRENT
(1) CONTROL UNIT	0.060	0.120
(4) W.P. HORN	———	0.160
(4) 15cd	———	0.236
(1) 75cd	———	0.152
(0) 110cd	———	0.000
(0) 15cd H/S	———	0.000
(7) 75cd H/S		1.127
TOTAL	0.060	1.795

TOTAL STANDBY CURRENT X 60 HOURS = 0.060Ax 60 HOURS = 3.600 A-HR
TOTAL NEW ALARM CURRENT X 10 MINUTES = 1.795A x 0.167HR = 0.299 A-HR

TOTAL MINIMUM AMPERE - HOUR RATING OF BATTERIES = 3.899 A-HR

NOTES:

1. BATTERY CALCULATION SHALL BE BASED ON A MINIMUM OF 60.0 HOURS STANDBY AND 10 MINUTES ALARM.
2. PROVIDE A MINIMUM OF 5 A-HR OF NEW BATTERY STANDBY POWER.

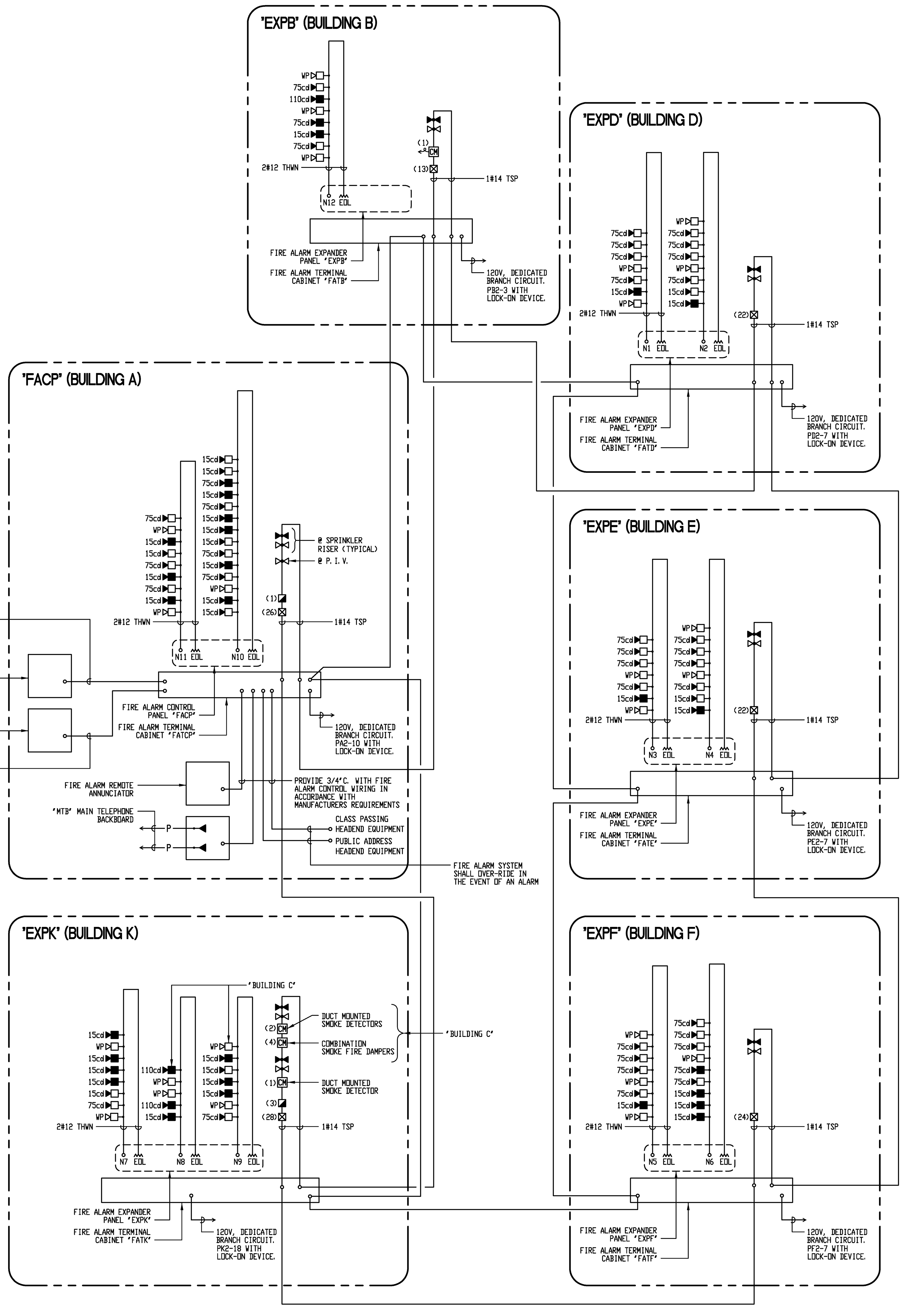

FIRE ALARM NOTE:

FIRE ALARM SUBMITTAL IS A COMPLETE PLAN SUBMITTAL IN ACCORDANCE WITH DSA POLICY #95-03(FLS) FEBRUARY 1, 1995.

Filename: I:\270\032\E-1.3.dwg (jmusick) Dimscale: 1=1(PS) Date: DEC 07, 2011 Time: 10:14 AM Xrefs: TITLEBLOCK

FIRE ALARM RISER DIAGRAM / FIRE ALARM BATTERY CALCULATIONS

FIRE ALARM EQUIPMENT SCHEDULE

ITEM DESCRIPTION	SYMBOL	MOUNTING	CATALOG NUMBER	CSFM LISTING NUMBER	NOTES	24 VOLTS LOAD
FIRE ALARM CONTROL PANEL 'FACP'		----	EST #EST3	7170-1657: 187		
FIRE ALARM EXPANDER PANEL		+48"	EST #EBP6A	7300-1501157		
FIRE ALARM ANNUNCIATOR PANEL		+48"	EST #LCDANN	7300-1501157		
MANUAL PULL STATION, ON FLUSH WALL MOUNTED OUTLET BOX		+48"	EST #278 SERIES	7150-1657: 111		
SMOKE DETECTOR ON FLUSH CEILING MOUNTED OUTLET BOX		CEILING	EST #SIGA-IPHS	7258-1657: 123		
WEATHERPROOF HORN ON FLUSH WALL MOUNTED OUTLET BOX	WP	+96"	EST #757-1AT SERIES	7135-1657: 175		0.040 A
VISUAL DEVICE ON FLUSH WALL MOUNTED OUTLET BOXES	15cd	+80"	GENESIS #G1RF-VM	7125-1657: 184	15 CANDELA MINIMUM PER U.L. STANDARD 1971	0.085 A
VISUAL DEVICE ON FLUSH WALL MOUNTED OUTLET BOXES	75cd	+80"	GENESIS #G1RF-VM	7125-1657: 184	75 CANDELA MINIMUM PER U.L. STANDARD 1971	0.085 A
VISUAL DEVICE ON FLUSH WALL MOUNTED OUTLET BOXES	110cd	+80"	GENESIS #G1RF-VM	7125-1657: 184	110 CANDELA MINIMUM PER U.L. STANDARD 1971	0.175 A
ELECTRONIC HORN AND VISUAL DEVICE ON SEPARATE FLUSH WALL MOUNTED OUTLET BOXES	15cd	+80"	GENESIS #G1RF-HDVM	7135-1657: 154	15 CANDELA MINIMUM PER U.L. STANDARD 1971	0.020 A
ELECTRONIC HORN AND VISUAL DEVICE ON SEPARATE FLUSH WALL MOUNTED OUTLET BOXES	75cd	+80"	GENESIS #G1RF-HDVM	7135-1657: 154	75 CANDELA MINIMUM PER U.L. STANDARD 1971	0.020 A
ELECTRONIC HORN AND VISUAL DEVICE ON SEPARATE FLUSH WALL MOUNTED OUTLET BOXES	110cd	+80"	GENESIS #G1RF-HDVM	7135-1657: 154	110 CANDELA MINIMUM PER U.L. STANDARD 1971	0.020 A
WEATHERPROOF FIRE SPRINKLER BELL	WP	+90"	EST #438-D-N5R-449	7136-1657: 150	120V	
HEAT DETECTOR ON SURFACE MOUNTED OUTLET BOX	H	ABOVE OR ON CEILING	EST #SIGA-HFS	7270-1657: 125		
CONTROL MODULE		---	EST #SIGA-CRR	7300-1657: 121		
TAMPER SWITCH		AT FIRE SPRINKLER RISER	SYSTEM SENSOR #OSY2 SERIES	7770-1653: 118		
FLOW SWITCH			#LUFD SERIES	7770-1653: 114		

VOLTAGE DROP CALCULATIONS

PANEL NAME	BUILDING NAME	CIRCUIT NO.	SERVICE TO	DISTANCE (feet)	CONDUCTOR SIZE (AWG)	LOAD CIRCUIT TOTAL (AMPS)	VOLTS DROPPED (%)	LOAD BREAKDOWN Device	Quantity	Load	Total
EXPD	D	N1	AUDIO AND VISUAL	310	12	0.783	3.35	15cd	1	0.059	0.059
								75cd	0	0.152	0.000
								110cd	0	0.191	0.000
								15cd HORN	0	0.081	0.000
								75cd HORN	4	0.161	0.644
								110cd HORN	0	0.203	0.000
								WP HORN	2	0.040	0.080
EXPD	D	N2	AUDIO AND VISUAL	270	12	0.864	3.22	15cd	1	0.059	0.059
								75cd	0	0.152	0.000
								110cd	0	0.191	0.000
								15cd HORN	1	0.081	0.081
								75cd HORN	4	0.161	0.644
								110cd HORN	0	0.203	0.000
								WP HORN	2	0.040	0.080
EXPE	E	N3	AUDIO AND VISUAL	310	12	0.783	3.35	15cd	1	0.059	0.059
								75cd	0	0.152	0.000
								110cd	0	0.191	0.000
								15cd HORN	0	0.081	0.000
								75cd HORN	4	0.161	0.644
								110cd HORN	0	0.203	0.000
								WP HORN	2	0.040	0.080
EXPE	E	N4	AUDIO AND VISUAL	270	12	0.864	3.22	15cd	1	0.059	0.059
								75cd	0	0.152	0.000
								110cd	0	0.191	0.000
								15cd HORN	1	0.081	0.081
								75cd HORN	4	0.161	0.644
								110cd HORN	0	0.203	0.000
								WP HORN	2	0.040	0.080
EXPF	F	N5	AUDIO AND VISUAL	310	12	0.823	3.52	15cd	1	0.059	0.059
								75cd	0	0.152	0.000
								110cd	0	0.191	0.000
								15cd HORN	0	0.081	0.000
								75cd HORN	4	0.161	0.644
								110cd HORN	0	0.203	0.000
								WP HORN	3	0.040	0.120
EXPF	F	N6	AUDIO AND VISUAL	270	12	1.013	3.77	15cd	3	0.059	0.177
								75cd	1	0.152	0.152
								110cd	0	0.191	0.000
								15cd HORN	0	0.081	0.000
								75cd HORN	4	0.161	0.644
								110cd HORN	0	0.203	0.000
								WP HORN	1	0.040	0.040
							240				
EXPC	C	N7	AUDIO AND VISUAL	240	12	0.558	1.85	15cd	4	0.059	0.236
								75cd	0	0.152	0.000
								110cd	0	0.191	0.000
								15cd HORN	1	0.081	0.081
								75cd HORN	1	0.161	0.161
								110cd HORN	0	0.203	0.000
								WP HORN	2	0.040	0.080
EXPC	C	N8	AUDIO AND VISUAL	260	12	0.521	1.87	15cd	1	0.059	0.059
								75cd	0	0.152	0.000
								110cd	2	0.191	0.382
								15cd HORN	0	0.081	0.000
								75cd HORN	0	0.161	0.000
								110cd HORN	0	0.203	0.000
								WP HORN	2	0.040	0.080
EXPB	B	N9	AUDIO AND VISUAL	240	12	0.499	1.65	15cd	3	0.059	0.177
								75cd	0	0.152	0.000
								110cd	0	0.191	0.000
								15cd HORN	1	0.081	0.081
								75cd HORN	1	0.161	0.161
								110cd HORN	0	0.203	0.000
								WP HORN	2	0.040	0.080
EXPB	B	N10	AUDIO AND VISUAL	310	12	1.235	5.28	15cd	4	0.059	0.236
								75cd	1	0.152	0.152
								110cd	0	0.191	0.000
								15cd HORN	4	0.081	0.324
								75cd HORN	3	0.161	0.483
								110cd HORN	0	0.203	0.000
								WP HORN	1	0.040	0.040
FACP	A	N11	AUDIO AND VISUAL	240	12	0.821	2.72	15cd	3	0.059	0.177
								75cd	0	0.152	0.000
								110cd	0	0.191	0.000
								15cd HORN	1	0.081	0.081
								75cd HORN	3	0.161	0.483
								110cd HORN	0	0.203	0.000
								WP HORN	2	0.040	0.080
FACP	A	N12	AUDIO AND VISUAL	370	12	0.653	3.33	15cd	1	0.059	0.059
								75cd	1	0.152	0.152
								110cd	0	0.191	0.000
								15cd HORN	0	0.081	0.000
								75cd HORN	2	0.161	0.322
								110cd HORN	0	0.203	0.000
								WP HORN	3	0.040	0.120

FORMULA: $\frac{\text{AMPS X DISTANCE X 21.6}}{\text{CIRC. MILS}} \times \frac{100}{24} = \%\ \text{DROPPED}$

CIRCUIT N12: $\frac{1.050 \times 370' \times 21.6}{6530} \times \frac{100}{24} = 5.35\ \%$

FIRE ALARM SYSTEM NOTES

FIRE ALARM COMPLETE PLAN SUBMITTAL

1.0 PROJECT INFORMATION

A. OCCUPANCY GROUP

E-1: EDUCATION CLASSROOM BUILDING
B: OFFICES/KITCHEN
A2.1: MULTI-PURPOSE

B. CONSTRUCTION TYPE

TYPE V - NONRATED.
TYPE V - 1-HOUR

C. PENETRATIONS OF FIRE RATED WALLS SHALL BE PROTECTED IN ACCORDANCE WITH CALIFORNIA BUILDING CODE, PART 2, CHAPTER 7, TITLE 24. REFER TO THE ARCHITECTURAL PLANS FOR FIRE-RATE CORRIDOR(S), OCCUPANCY SEPARATION(S) AND AREA SEPARATION WALL(S).

D. UPON COMPLETION OF SYSTEM INSTALLATION, THE SYSTEM SHALL BE TESTED IN THE PRESENCE OF AND IN A MANNER ACCEPTABLE TO THE ENFORCING AGENCY.

E. NEW FIRE ALARM SYSTEM SHALL BE PROVIDED TO SERVE THE ENTIRE CAMPUS.

F. FIRE ALARM SYSTEM IS AN AUTOMATIC SYSTEM.

2.0 APPLICABLE CODES AND STANDARDS

A. APPLICABLE CODES AS OF NOVEMBER 1, 2002

PART 1 2001 CALIFORNIA BUILDING STANDARDS ADMINISTRATIVE CODE, TITLE 24 C.C.R.
PART 2 2001 CALIFORNIA BUILDING CODE, TITLE 24 C.C.R. (1997 UNIFORM BUILDING CODE VOLUMES 1-3 OF THE INTERNATIONAL CONFERENCE OF BUILDING OFFICIALS, WITH CALIFORNIA AMENDMENTS)
PART 3 2004 CALIFORNIA ELECTRICAL CODE, TITLE 24 C.C.R. (1999 NATIONAL ELECTRICAL CODE OF THE NATIONAL FIRE PROTECTION ASSOCIATION, NFPA)
PART 4 2001 CALIFORNIA MECHANICAL CODE, TITLE 24 C.C.R. (2000 UNIFORM MECHANICAL CODE OF THE INTERNATIONAL ASSOCIATION OF PLUMBING AND MECHANICAL OFFICIALS, IAPMO)
PART 5 2001 CALIFORNIA PLUMBING CODE, TITLE 24 C.C.R. (2000 UNIFORM PLUMBING CODE OF THE INTERNATIONAL ASSOCIATION OF PLUMBING AND MECHANICAL OFFICALS, IAPMO)
PART 6 2005 CALIFORNIA ENERGY CODE, TITLE 24 C.C.R.
PART 7 2001 CALIFORNIA ELEVATOR SAFETY CONSTRUCTON CODE, TITLE 24 C.C.R.
PART 8 2001 CALIFORNIA HISTORICAL BUILDING CODE, TITLE 24 C.C.R.
PART 9 2001 CALIFORNIA FIRE CODE, TITLE 24 C.C.R. (2000 UNIFORM FIRE CODE OF THE WESTERN FIRE CHIEFS ASSOCIATION)
PART 10 2001 CALIFORNIA CODE FOR BUILDING CONVERSATION, TITLE 24 C.C.R. (1997 UNIFORM CODE FOR BUILDING CONVERSATION OF THE INTERNATIONAL CONFERENCE OF BUILDING OFFICIALS, WITH AMENDMENTS)
PART 12 2001 CALIFORNIA REFERENCE STANDARDS CODE, TITLE 24 C.C.R. 1990 TITLE 19 C.C.R, PUBLIC SAFETY, STATE, FIRE MARSHAL REGULATIONS

B. PARTIAL LIST OF APPLICABLE NFPA STANDARDS

NFPA 13	AUTOMATIC SPRINKLER SYSTEMS	2002 EDITION
NFPA 14	STANDPIPE SYSTEMS	2003 EDITION
NFPA 17	DRY CHEMICAL EXTINGUISHING SYSTEMS	2002 EDITION
NFPA 17A	WET CHEMCIAL SYSTEMS	2002 EDITION
NFPA 20	STATIONARY PUMPS	1999 EDITION
NFPA 24	PRIVATE FIRE SERVICE MAINS	2002 EDITION
NFPA 72	NATIONAL FIRE ALARM CODE (CALIFORNIA AMENDED) (NOTE SEE UL STANDARD 1971 FOR 'VISUAL DEVICES')	2002 EDITION
NFPA 253	CRITICAL RADIANT FLUX OR FLOOR COVERING SYSTEMS	2000 EDITION
NFPA 2001	CLEAN AGENT FIRE EXTINGUISHING SYSTEMS	2000 EDITION

REFERENCE CODE SECTION FOR NFPA STANDARDS - CBC (SFM) 3504.1

3.0 UPON RECEIPT OF THE CERTIFICATE OF COMPLIANCE, THE INSTALLER SHALL SUPPLY THE OWNER WITH A WRITTEN OPERATING, TESTING AND MAINTENANCE INSTRUCTIONS, POINT-TO-POINT AS BUILD DRAWINGS AND EQUIPMENT SPECIFICATIONS.

4.0 NFPA 72 CHAPTER 7 INSPECTION TESTING AND MAINTENANCE (1999) COMPLETE THE INSPECTION AND TESTING FORM IN ITS ENTIRETY SUBMIT A COPY TO THE DISTRICT, ARCHITECT AND DSA DIVISION OF FIRE AND LIFE SAFETY.

WIRING DIAGRAMS

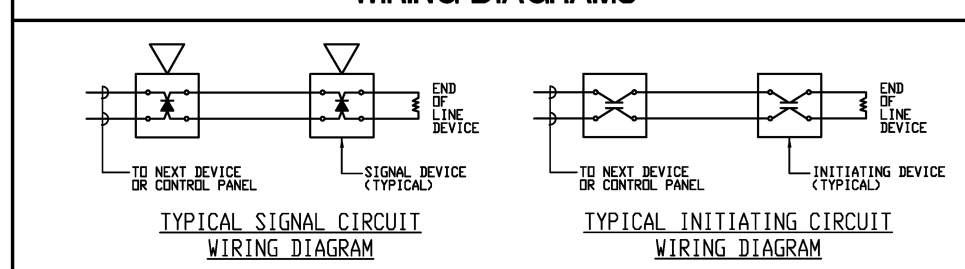

TYPICAL SIGNAL CIRCUIT WIRING DIAGRAM

TYPICAL INITIATING CIRCUIT WIRING DIAGRAM

PULL STATION/HORN/STROBE ELEVATION

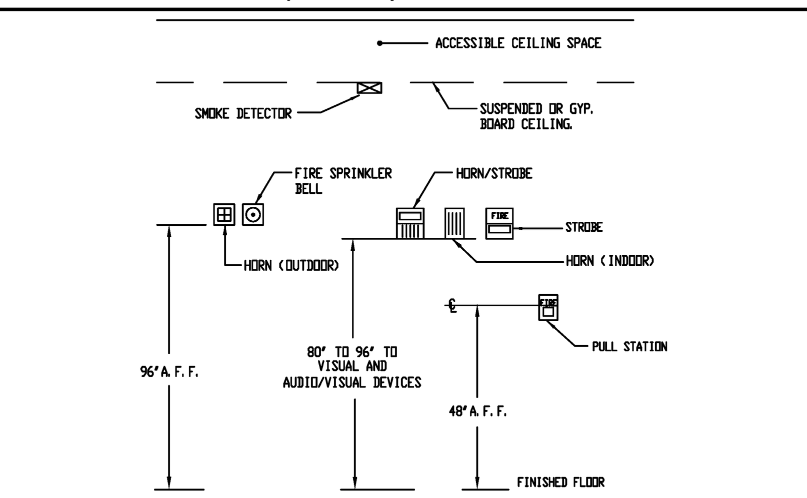

FIRE ALARM SEQUENCE OF OPERATIONS

ACTION \ DEVICE	MANUAL PULL STATION	AREA SMOKE/ HEAT DETECTOR	AIR DUCT SMOKE DETECTOR	KITCHEN SUPPR-ESSION	SPRINKLER WATER FLOW SWITCH	SPRINKLER VALVE TAMPER SWITCH	SPRINKLER POST INDICATOR SWITCH	120VAC POWER FAILURE	OVER RIDE PUBLIC ADDRESS	OVER RIDE CLASS PASSING SYSTEM
SOUND ALARM AT FIRE ALARM CONTROL PANEL	YES	YES	YES	YES	YES	YES	YES	NO	NO	NO
SOUND CONTROL PANEL TROUBLE BUZZER	ON WIRING FAULT	ON WIRING FAULT	ON WIRING FAULT	ON WIRING FAULT	ON WIRING FAULT	ON WIRING FAULT	ON WIRING FAULT	YES	YES	YES
ACTIVATE RELAY FOR MONITORING (ALARM OR TROUBLE)	YES	YES	YES	YES	YES	YES	YES	YES	YES	YES
SOUND SPRINKLER BELL	NO	NO	NO	NO	YES	NO	NO	NO	NO	NO
ANNUNCIATE AT FIRE CONTROL PANEL (ALARM OR TROUBLE)	YES	YES	YES	YES	YES	YES	YES	YES	YES	YES
ANNUNCIATE AT REMOTE FIRE ALARM ANNUNCIATOR (ALARM OR TROUBLE)	YES	YES	YES	YES	YES	YES	YES	YES	YES	YES
ACTIVATE AUDIBLE/ VISUAL ALARM SIGNAL THROUGHOUT BUILDING	YES	YES	YES	NO	YES	NO	NO	NO	NO	NO
SHUT DOWN OF ASSOCIATED A/C UNITS	NO	YES	YES	NO	YES	NO	NO	NO	NO	NO
CLOSE ALL COMBINATION SMOKE FIRE DAMPERS	NO	YES	YES	NO	YES	NO	NO	YES	NO	NO

LICENSED ARCHITECT JAMES M. STINSON C19098 RENEWAL 02/28/ STATE OF CALIFORNIA

REGISTERED PROFESSIONAL ENGINEER STEPHEN R. ZAJICEK No. E 10372 Exp. 09-30-12 ELECTRICAL STATE OF CALIFORNIA

FBA Engineering
Consulting Electrical Engineers
3420 Irvine Avenue Suite 200
Newport Beach, California 92660-3189
TEL: 949 852 9995 FAX: 949 852 1657
EMAIL: fba@fbaengineering.net

FBA # 270.032

DATE	REVISIONS

P S W C GROUP
ARCHITECTS / PLANNERS
1887 BUSINESS CENTER DR., SUITE 3, SAN BERNARDINO, CA. 92408
909/890-2233 FAX. 909/890-2644

ROOSEVELT II ELEMENTARY SCHOOL
SAN BERNARDINO CITY UNIFIED SCHOOL DISTRICT
1261 W. 16TH STREET, SAN BEERNARDINO, CA.

FIRE ALARM, RISER, NOTES AND DETAILS

JOB NO. P520
DRAWN BY FBA
DATE 12/8/2011

E-1.3

RE-BID #F09-02 ROOSEVELT II (HENRY) E.S. NEW CONSTRUCTION BID ISSUANCE SET 12/09/11