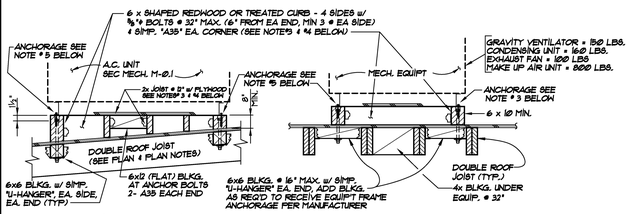

NOTES:

1. THIS DETAIL APPLIES WHERE ROOF MOUNTED EQUIPMENT'S .
2. ATTACH THE EQUIPMENT FRAME IN ACCORDANCE WITH THE MANUFACTURER'S INSTRUCTIONS, OR WITH MINIMUM ANCHORAGE NOTED HERON.
3. REFER TO MECHANICAL DWG'S FOR PLATFORM DETAILS. WHERE PLATFORM IS NOT NEEDED AND THE EQUIPMENT BASE CURB SITS DIRECTLY ON THE MAIN ROOF PLYWOOD SHTG, PROVIDE BLOCKING DETAILS AS SHOWN AND OMIT PLATFORM. MIN. 4- 1/2"ø BOLTS PER UNIT
4. SPAN 2x6 PLATFORM JOISTS IN SHORT DIMENSION OF PLATFORM, USE 3/4" CDX PLYWOOD COVER SHEATHING w/ 10d @ 4" O.C. EN & 12" O.C
5. A.C. UNITS MOUNTED ON VIBRATION ISOLATORS SEE DETAIL 14 / M-3.0. ANCHOR TO 6 x 12 FLAT BLKG. EXTEND PLATFORM AS REQUIRED TO FIT.
6. MAX. HEIGHTS: MECH. UNIT= 1210 LBS. (8-BOLTS) , 710 LBS. (6-BOLTS) , 350 LBS. (4-BOLTS)

MECHANICAL EQUIPMENT PLATFORM DETAIL — 1 / S1.2

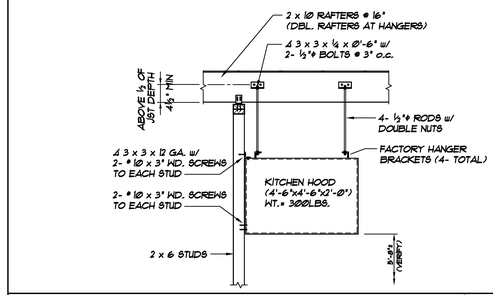

KITCHEN HOOD ANCHORS — 5 / S1.2

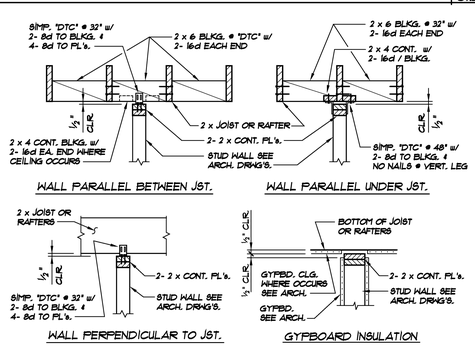

FULL HEIGHT NON-BEARING TOP PLATE DETAILS — SCALE: 3/4" = 1'-Ø" — 6 / S1.2

CEILING JOIST SCHED'L.

CLEAR SPAN OF JOIST	JOIST SIZE INTERIOR	JOIST SIZE EXTERIOR	LEDGER NAILS
UP TO 8'-Ø"	2 x 4 @ 16"	2 x 6 @ 16"	2- 16d
8'-1" TO 12'-Ø"	2 x 6 @ 16"	2 x 8 @ 16"	3- 16d
12'-1" TO 18'-Ø"	2 x 8 @ 16"	2 x 10 @ 16"	4- 16d
18'-1" TO 22'-Ø"	2 x 10 @ 16"	2 x 12 @ 16"	4- 16d

INTERIOR LOADS: DL = 5, LL = 10 (PSF)
EXTERIOR LOADS: DL=10, LL=10 (PSF)

KEY NOTES:

1. 2- 2 x CONT. TOP PLATES
2. 2x STUDS @ 16"o.c. SEE WALL SECTION FOR SIZE
3. 2x BLKG. FULL DEPTH
4. SIMP. "A34" ONE SIDE PER BLK
5. LAP JOIST 8" MIN. AND FACE NAIL WITH 3- 16d
6. 2x (JOIST DEPTH) BLKG. @ 24" w/ 2- 16d @ 3"o.c. OR F.N. EA. END
7. 2x CEILING JOIST w/ SIMP. "LU" SEE SCHD'L. FOR SIZE AND SPACING
8. 2x LEDGER SEE SCHED'L. FOR NAILING
9. EXTEND JST. TO PERPENDICULAR JST.
10. 2x CONT. w/ 16d @ 12" TYP. 16'd @ 6" o.c. AT WALLS SUPPORTING CABINETS
11. 2x BLKG. w/ 2- 16d FACE NAIL TO PL'e.
12. 2x (JOIST DEPTH) CONT. BLKG. w/ 2- 16d T.N. EA. END
13. 2x6 DIAG. BRACE @ 48" w/ 3- 16d EA. END. CONNECT TOP TO ROOF JOISTS PER 16/SL3. REDUCE SPACING TO 16" o.c. AT WALLS SUPPORTING CABINETRY ON BOTH SIDES OF THE WALL.

NOTES:

1. WHERE GYPBD. OR PLYWD. IS CONT. PAST CEILING, RUN BEHIND LEDGER AND USE SIMP."SD9¼" INSTEAD OF 16d (2" EMBED. INTO STUD)
2. SEE ARCH. DRAWINGS FOR FRAMED CEILING LOCATIONS

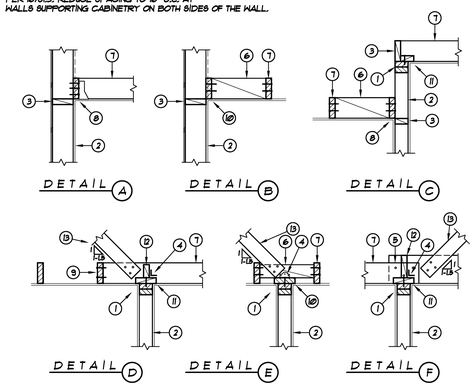

CEILING FRAMING AT PARTITION STUD WALLS — SCALE: 3/4" = 1'-Ø" — 8 / S1.2

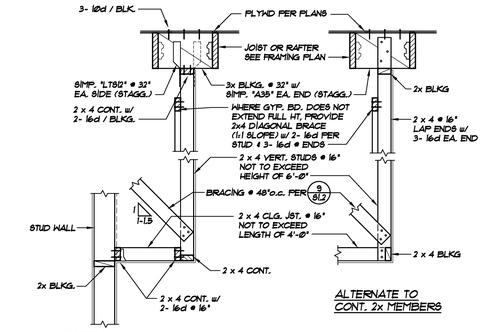

NOTES:

1. WHERE CLG. JOIST LENGTH EXTENDS PAST 4'-Ø" SEE TYPICAL CEILING JOIST DETAILS PER 1/SL3
2. VERT. STUDS HEIGHT SHALL NOT BE GREATER 6'-Ø", HORIZ. CEILING JOIST SHALL NOT BE GREATER THAN 4'-Ø".
3. WHERE GYPBD. OR PLYWD. IS CONT. PAST CEILING, RUN BEHIND LEDGER AND USE SIMP."SD9¼" INSTEAD OF 16d (2" EMBED. INTO STUD)

SOFFIT FRAMING AT STUD WALLS — SCALE: 3/4" = 1'-Ø" — 11 / S1.2

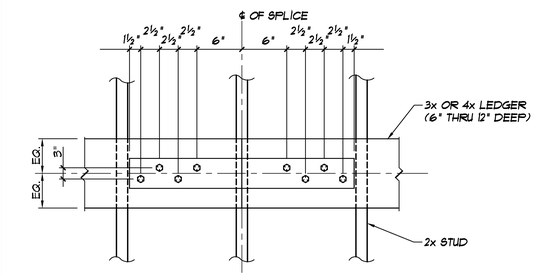

3x - 4x LEDGER SPLICE DETAIL

LEDGER SPLICE DETAIL				
LEDGER SIZE	8- 3/4"ø BOLTS W/ @ 1/4 x 6"	TYPE	12- 3/4"ø BOLTS W/ @ 1/4 x 6"	TYPE
3x	4, 815#	A/B/E	7, 025#	C
4x	6, 280#	C	9, 340#	D

LEDGER SPLICE DETAIL — 2 / S1.2

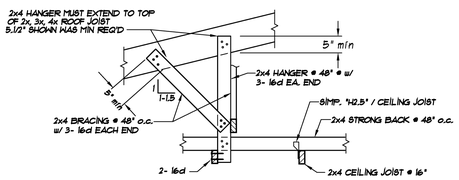

NOTES:

1. STAGGER HANGERS SO CEILING JOISTS ARE SUPPORTED ON ALTERNATE ROOF JOISTS.
2. 2x4 CEILING JOISTS MAY BE SUPPORTED BY NON-BEARING WALLS WHEN SPAN DOES NOT EXCEED 8'-Ø"

SUSPENDED CEILING DETAIL — 7 / S1.2

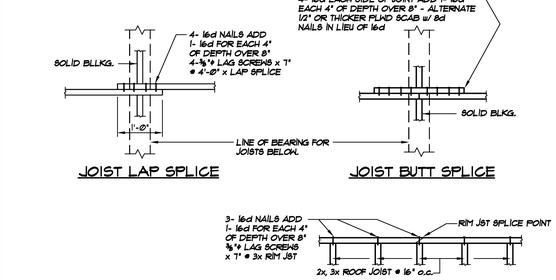

JOIST SPLICE DETAIL — 3 / S1.2

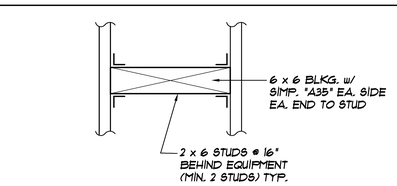

NOTE:

THE FRAMING CONTRACTOR SHALL PROVIDE THIS BACKING FOR ALL MECH., ELECT., PLUMBING AND ARCH. REQUIREMENTS. THIS DETAIL WILL NOT BE REFERENCED ON OTHER DRAWINGS BUT MUST BE PROVIDED IN ALL CASES NOT OTHERWISE DETAILED.

TYPICAL BACKING DETAIL — 15 / S1.2

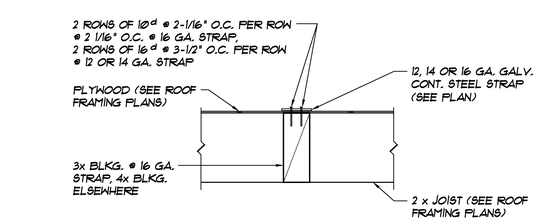

ROOF STRAPPING DETAIL — 4 / S1.2

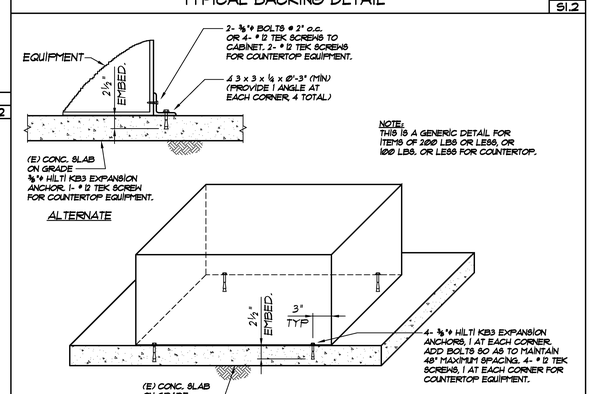

TYPICAL FLOOR MOUNTED EQUIPMENT — 16 / S1.2

SOFFIT BRACE DETAILS — SCALE: 3/4" = 1'-Ø" — 9 / S1.2

NOTE:

1. WHERE SIDE BEAMS ARE SMALLER THAN MAIN BEAM PROVIDE 1/4" 'E's AND 1/8" WELDING TO MATCH SIMP. "ECCO"
2. ADD SOLID WOOD SHIMS AS REQ'D. HEIGHT OF BEARINGS.

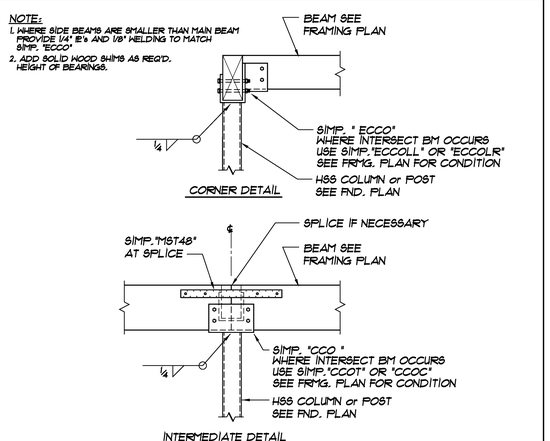

TYPICAL WOOD BEAM TO HSS COLUMN — 10 / S1.2

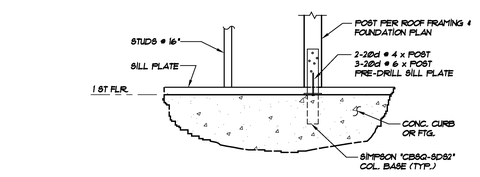

WOOD POST TO SILL PL. ATTACHMENT — 12 / S1.2

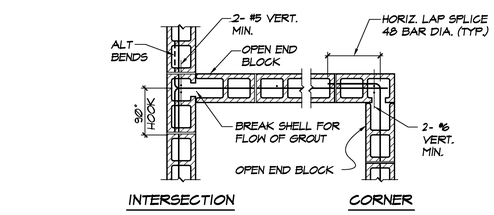

CONCRETE MASONRY WALL INTERSECTIONS — 13 / S1.2

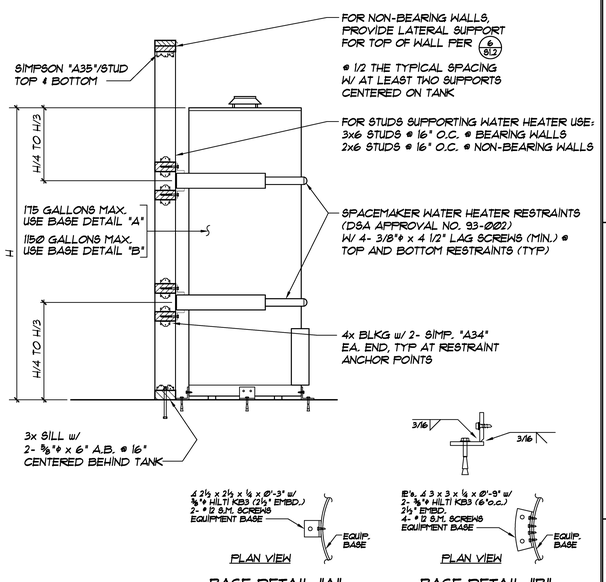

WATER HEATER ANCHORAGE — 14 / S1.2

REGISTERED PROFESSIONAL ENGINEER — JAMES R. THOMPSON — No. 1309 — EXP. 3-31-2013 — STRUCTURAL — STATE OF CALIFORNIA

LICENSED ARCHITECT — JAMES R. THOMPSON — C10099 — RENEWAL 06/28/13 — STATE OF CALIFORNIA

IDENTIFICATION STAMP
DIV. OF THE STATE ARCHITECT
OFFICE OF REGIONAL OPERATIONS
APPL. 04-107199
AC. ___ FS. ___ SS. ___
DATE: ___

THOMPSON & ASSOCIATES
STRUCTURAL ENGINEERS
8128 E. WALNUT STREET
PASADENA, CALIFORNIA 91107
PH (626)449-2970
FAX (626)449-4561

REVISIONS

P S W C GROUP
ARCHITECTS / PLANNERS
1897 BUSINESS CENTER DR., SUITE G, SAN BERNARDINO, CA. 92408
909/880-2253 FAX. 909/880-2844

ROOSEVELT II ELEMENTARY SCHOOL
SAN BERNARDINO CITY UNIFIED SCHOOL DISTRICT
1281 W. 16TH STREET, SAN BERNARDINO, CA.

GENERAL NOTES AND TYPICAL DETAILS

JOB NO. | DRAWN BY | DATE

S1.2

RE-BID #F09-02 ROOSEVELT II (HENRY) E.S. NEW CONSTRUCTION BID ISSUANCE SET 12/09/11