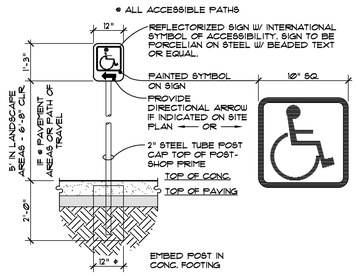

NOTES:
1. SIGNAGE SHALL BE PLACED ● ALL ACCESSIBLE PATHWAYS / SIDEWALKS. PLACEMENT INDICATED ON SITE PLAN.
2. SIGNS MAY BE PLACED ON BUILDINGS, FENCES, WALLS ● MOUNTING HEIGHTS INDICATED ON DETAIL AS AN ALTERNATE MOUNTING PLACE.

21 ACCESSIBLE SIGN 1"=1'-0"

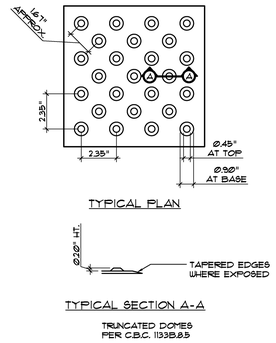

TRUNCATED DOMES PER C.B.C. 1133B.8.5

17 TRUNCATED DOMES 3"=1'-0"

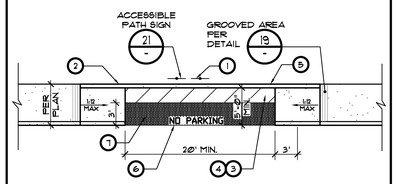

1. SIGN: PASSENGER LOADING ZONE-NO PARKING (WITH WHEELCHAIR SYMBOL)
2. BLUE CURB
3. 4" WIDE BLUE STRIPING @ 36" O.C.
4. STRIPED AREA NOT TO EXCEED 2% SLOPE IN ANY DIRECTION
5. BACK OF WALK
6. "NO PARKING" IN 12" HIGH WHITE LETTERS
7. TRUNCATED DOMES PER C.B.C. 1133B.8.5

13 PASSENGER DROP-OFF AREA 1/8"=1'-0"

9 NOT USED

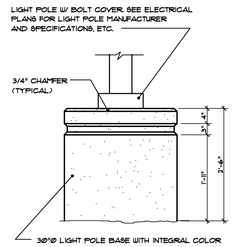

5 LIGHT POLE BASE 3/4"=1'-0"

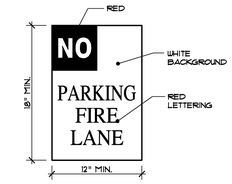

PROVIDE A MIN. 12"x18" METAL REFLECTORIZED SIGN W/ RED LETTERING ON WHITE BACKGROUND STATING "NO PARKING - FIRE LANE". BOTT. OF SIGN SHALL BE 7'-0" ABOVE GROUND LEVEL. LOCATE PER FIRE CODE SEC. 901.4.2

1 FIRE LANE SIGN 1 1/2"=1'-0"

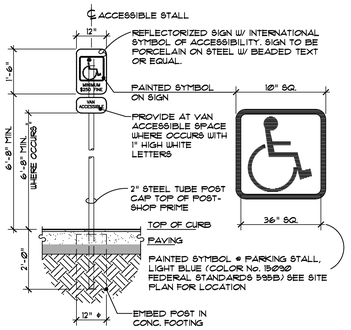

22 ACCESSIBLE PARKING SIGN 1/2"=1'-0"

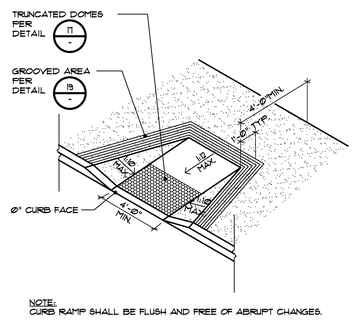

NOTE:
CURB RAMP SHALL BE FLUSH AND FREE OF ABRUPT CHANGES.

18 ACCESSIBLE RAMP 1/4"=1'-0"

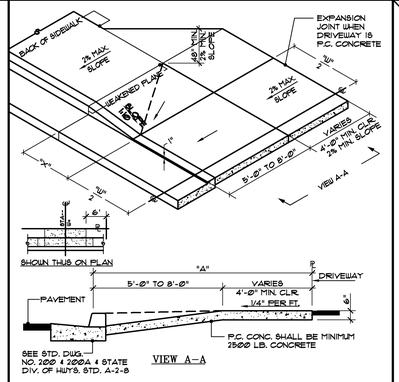

14 DRIVE APPROACH N.T.S.

10 NOT USED

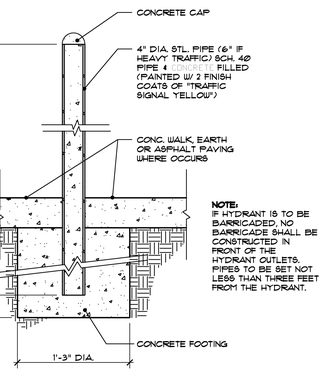

NOTE:
IF HYDRANT IS TO BE BARRICADED, NO BARRICADE SHALL BE CONSTRUCTED IN FRONT OF THE HYDRANT OUTLETS. PIPES TO BE SET NOT LESS THAN THREE FEET FROM THE HYDRANT.

6 PIPE BOLLARD 1 1/2"=1'-0"

2 NOT USED

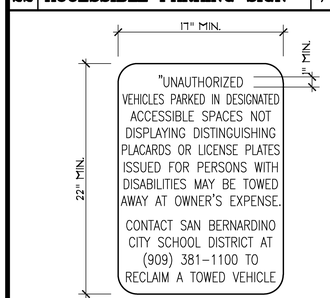

POLE MOUNTED SIGNS TO BE 80" FROM FIN. GRADE
WALL MOUNTED SIGNS TO BE 36" FROM FIN. GRADE

23 TOW AWAY SIGN N.T.S.

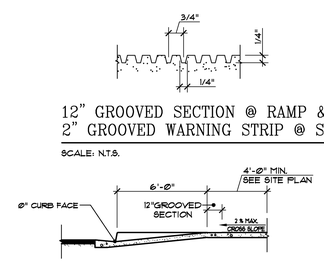

19 SECTION AT ACCESSIBLE RAMP 1/4"=1'-0"

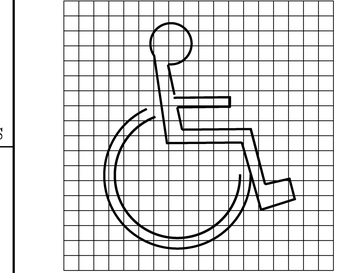

THE INTERNATIONAL SYMBOL OF ACCESSABILITY IS REQUIRED TO IDENTIFY ACCESSIBLE FACILITIES. THE SYMBOL IS A WHITE FIGURE ON A BLUE BACKGROUND. (COLOR No. 15090 FEDERAL STANDARDS 595B)

15 ACCESSIBLE SYMBOL N.T.S.

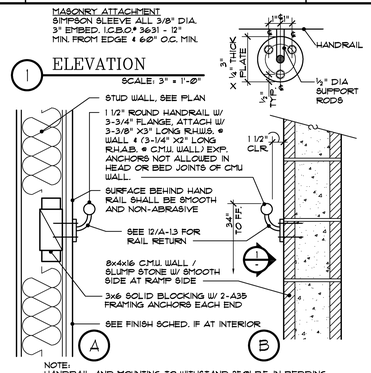

NOTE:
HANDRAIL AND MOUNTING TO WITHSTAND 250LBF. IN BEDDING, SHEAR AND TENSION W/ 1/8" MIN. RADIUS ON ALL EDGES. BAR SHALL NOT ROTATE IN FITTING

11 HANDRAIL AT RAMP & STAIRS 1 1/2"=1'-0"

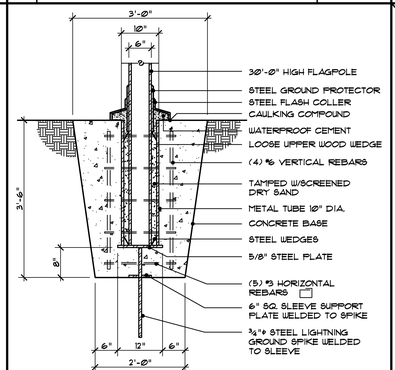

NOTE: COMPLETE FLAGPOLE AND FOUNDATION NOT PART OF O.S.A. APPROVAL

7 FLAGPOLE FOOTING 3/4"=1'-0"

3 NOT USED

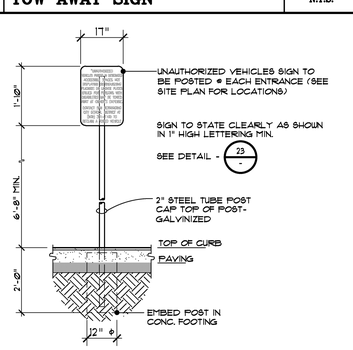

24 TOW AWAY SIGN 1/2"=1'-0"

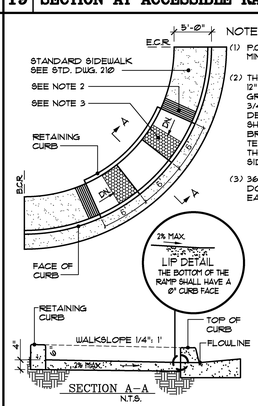

NOTES:
(1) P.C. CONC. SHALL BE MIN 3000 LB. CONC.
(2) THE RAMP SHALL HAVE A 12" WIDE BORDER WITH 1/4" GROOVES APPROXIMATELY 3/4" O.C. SEE GROOVING DET. THE SURFACE OF RAMP SHALL HAVE A TRANSVERSE BROOMED SURFACE TEXTURE ROUGHER THAN THE SURROUNDING SIDEWALK.
(3) 36" WIDE TRUNCATED DOMES PER C.B.C. 1133B.8.5 EACH RAMP

20 WHEELCHAIR RAMP DETAIL 1/2"=1'-0"

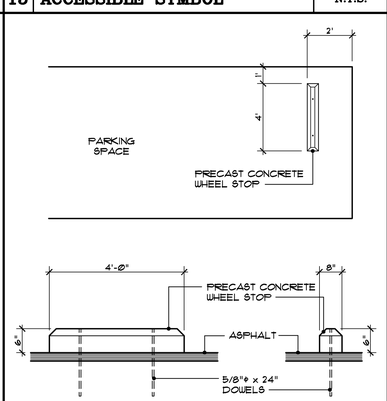

16 WHEEL STOP 3/8"=1'-0"

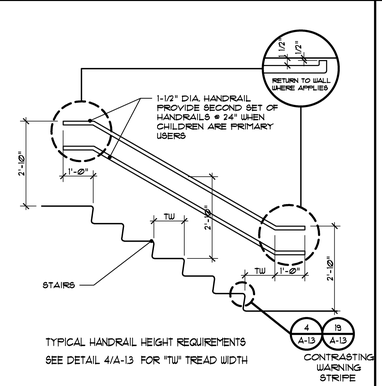

TYPICAL HANDRAIL HEIGHT REQUIREMENTS
SEE DETAIL 4/A-13 FOR "TW" TREAD WIDTH

12 TYPICAL HANDRAIL DETAIL 1/2"=1'-0"

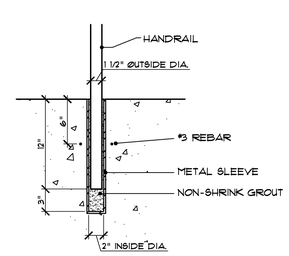

8 HANDRAIL SLEEVE 1 1/2"=1'-0"

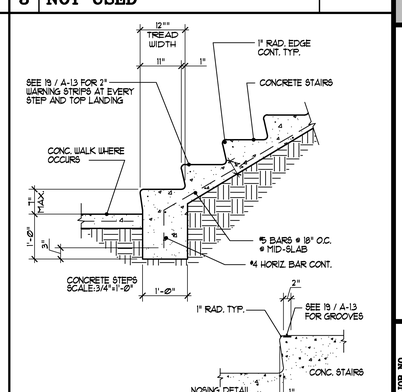

4 STANDARD STEP DETAIL AS SHOWN

STATE OF CALIFORNIA
JAMES M. SIMONDS
ARCHITECT
C19096
RENEWAL 02/28/13

DATE	REVISIONS
	1

P S W C GROUP
ARCHITECTS / PLANNERS
1867 BUSINESS CENTER DR., SUITE 3, SAN BERNARDINO, CA. 92408
909/890-2233 FAX 909/890-2844

ROOSEVELT II ELEMENTARY SCHOOL
SAN BERNARDINO CITY UNIFIED SCHOOL DISTRICT
1261 W. 16TH STREET, SAN BERNARDINO, CA.

MISC. SITE DETAILS

SCALE: AS SHOWN

JOB NO. P530
DRAWN BY
DATE 6/7/2011

A-1.3

RE-BID #F09-02 ROOSEVELT II (HENRY) E.S. NEW CONSTRUCTION BID ISSUANCE SET 12/09/11