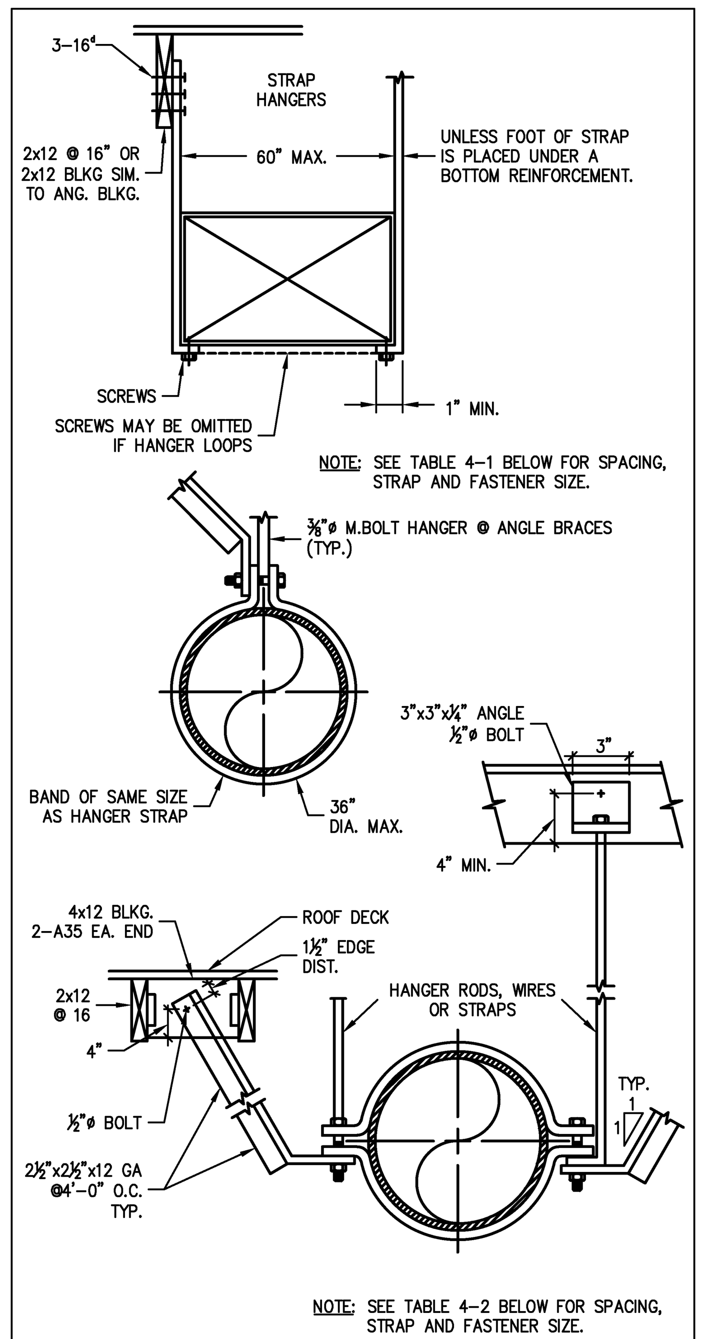

DUCT SUPPORT DETAIL (10)

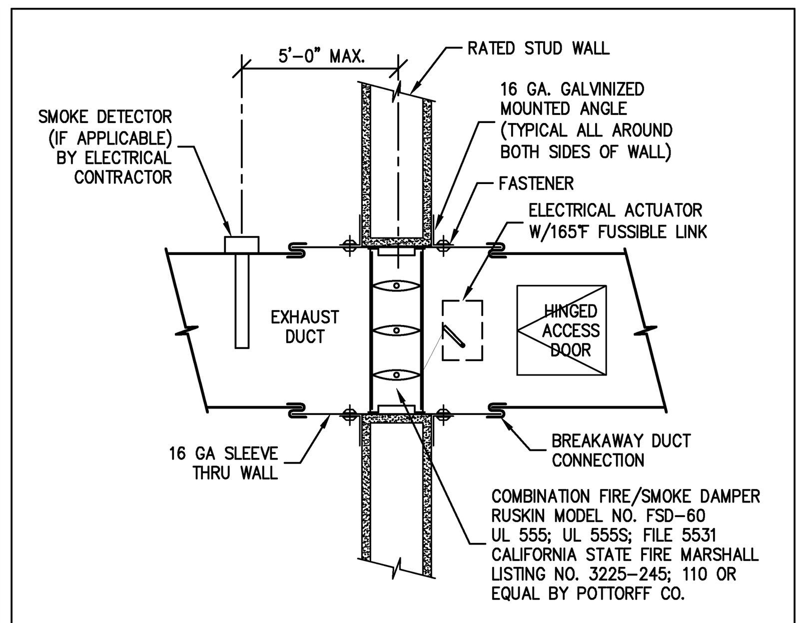

1. STEEL FRAMED FIRE PARTITION WITH SINGLE HEADER AND FIRE RATED MATERIAL LINING THE OPENING. OPENING SHALL BE A MINIMUM 1/8" PER FOOT LARGER THAN THE DAMPER AND SLEEVE ASSEMBLY SIZE. MAXIMUM OPENING SIZE SHALL NOT EXCEED 1/8" PER FOOT PLUS 1". OPENING SHALL NOT BE LESS THAN 1/4" LARGER THAN ANY SIZE DAMPER AND SLEEVE ASSEMBLY.
2. DUCT TO DAMPER SLEEVE CONNECTION SHALL BE BREAK AWAY STYLE. RECTANGULAR DUCTS SHALL USE ONE OR MORE OF THE FOLLOWING CONNECTIONS: PLAIN S-SLIP, HEMMED S-SLIP, STANDING S-SLIP AND OTHER SIMILAR AND COMMONLY USED SLIP TYPE JOINTS. DUCTMATE MAY BE USED IN LIEU OF SLIP JOINTS PROVIDED THAT CORNERS ARE NOT BOLTED AND NON-METALIC CLEATS ARE USED. SLEEVE THROUGH WALL SHALL EXTEND APPROXIMATELY 3" MIN. BEYOND THE PARTITION.
3. MOUNTING ANGLES SHALL BE A MINIMUM OF 1 1/2"X1 1/2"X16 GAUGE. THE ANGLES SHOULD BE ATTACHED TO THE SLEEVE, NOT THE PARTITION, WITH NO. 10 SHEET METAL SCREWS, OR WELDS, OR 1/4"X20 BOLTS AT 12"O.C. MAXIMUM. A MINIMUM OF TWO CONNECTIONS PER SIDE, TOP AND BOTTOM. MOUNTING ANGLES SHALL OVERLAP THE WALL A MINIMUM OF 1". ENSURE THAT ATTACHMENT DEVICE DOES NOT INTERFERE WITH THE OPERATION OF THE DAMPERS AND THE FREE MOVEMENT OF THE BLADES.
4. THE FIRE DAMPERS SHALL BE ATTACHED TO THE SLEEVE BY WELDING, OR WITH NO. 10 SHEET METAL SCREWS, OR BOLTED WITH 1/4"X20 BOLTS AT 9" O.C. MAXIMUM OF TWO CONNECTIONS PER SIDE, TOP AND BOTTOM.
5. A CONTINUOS 1/8" BEAD OF DOW-CORNING 999, DOW-CORING SILASTIC 732 RTV, FIBERFAX, OR GE RTV SILICON RUBBER SEALANT SHALL BE APPLIED BETWEEN THE DAMPER AND THE SLEEVE. ONLY APPLY THE SEALANT TO THE "LINKAGE SIDE" OF THE DAMPER.
6. PROVIDE A 120 VOLT CIRCUIT TO DAMPER ACTUATOR MOTOR. SEE SHEET E-A.1 FOR ADDITIONAL INFORMATION.

COMBINATION SMOKE/FIRE DAMPER (9)

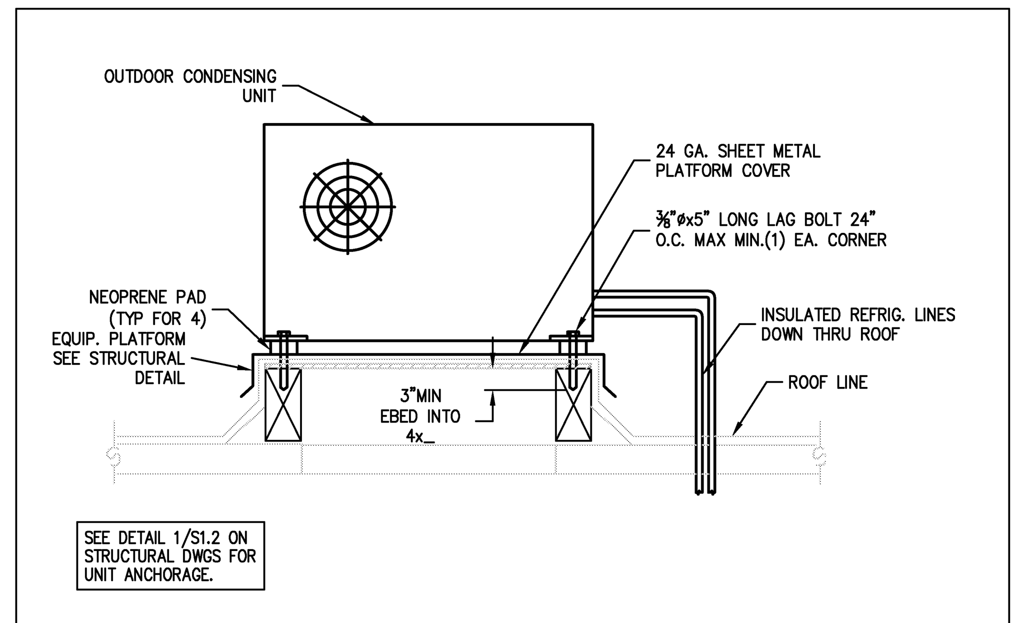

OUTDOOR CONDENSING UNIT DETAIL (4)

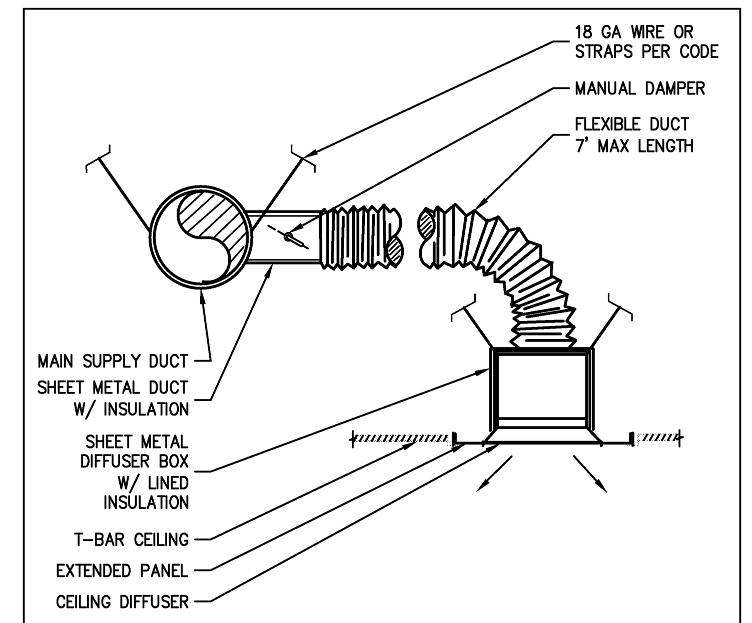

CEILING DIFFUSER INSTALLATION DETAIL (3)

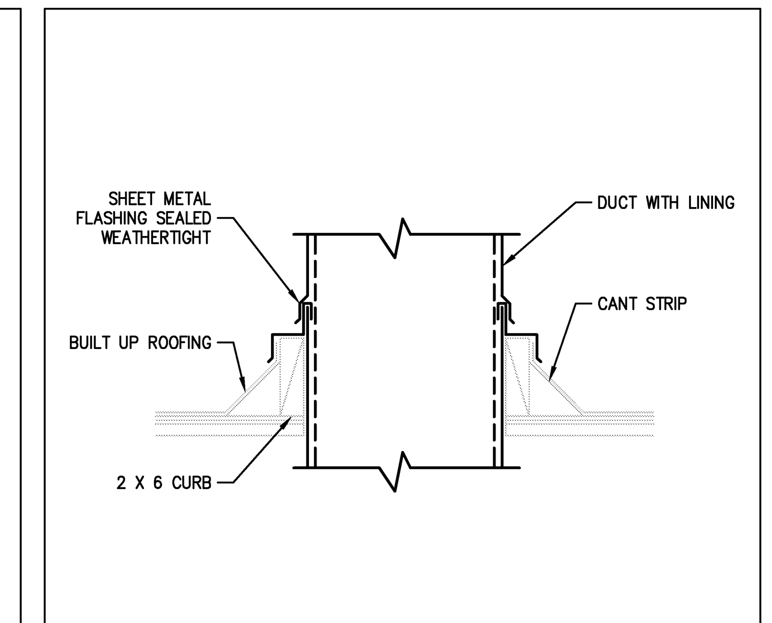

DUCT PENETRATION DETAIL THRU ROOF (2)

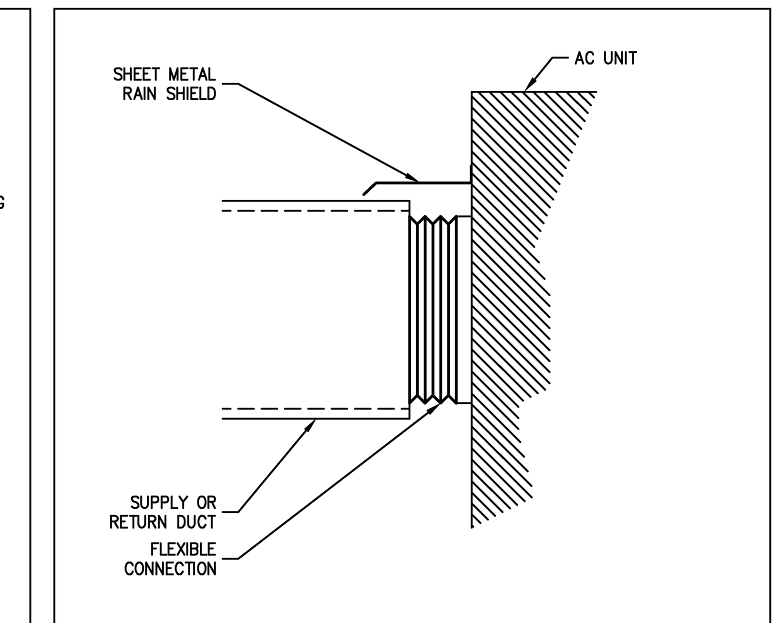

AIR CONDITIONING UNIT CONNECTION DETAIL (1)

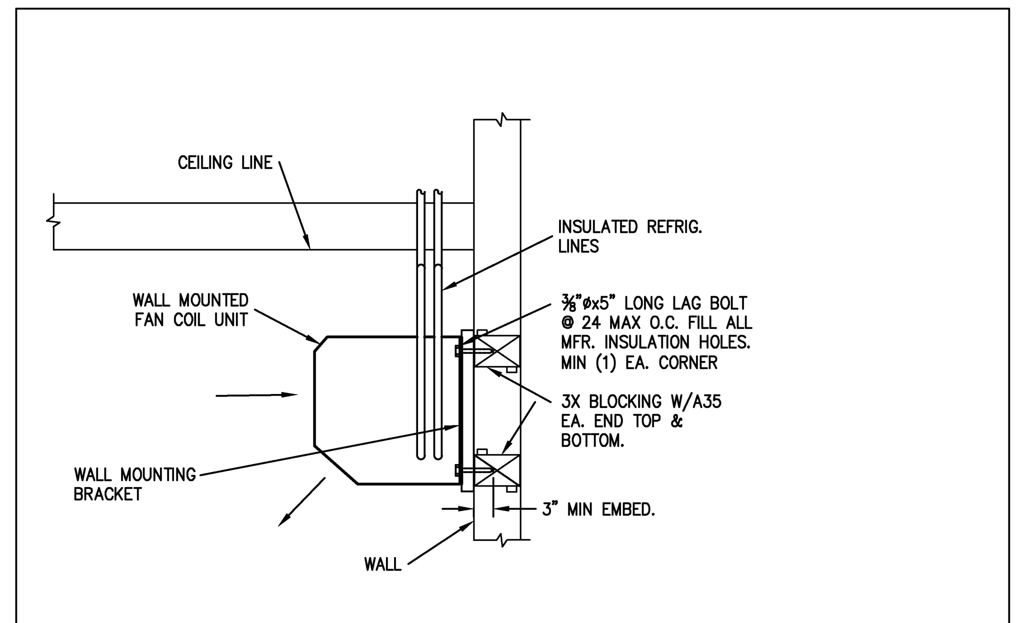

WALL MOUNTED FAN COIL UNIT DETAIL (8)

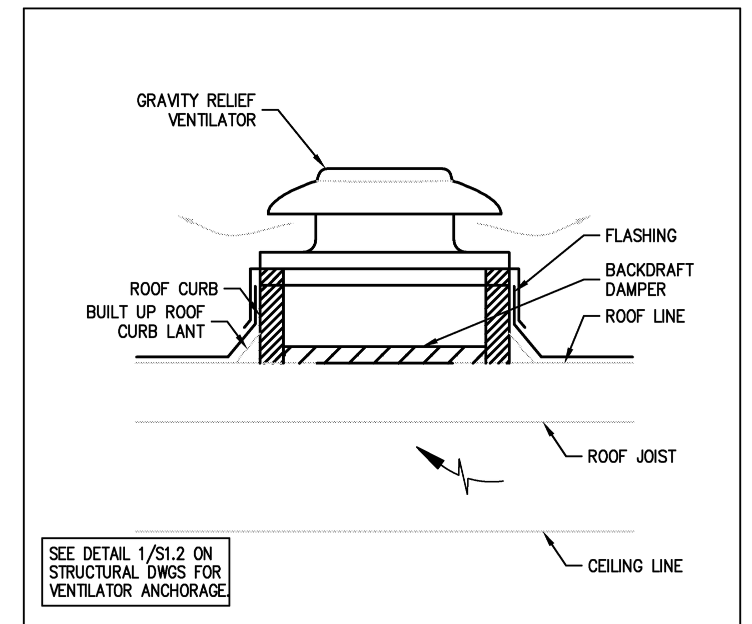

GRAVITY RELIEF VENTILATOR DETAIL (7)

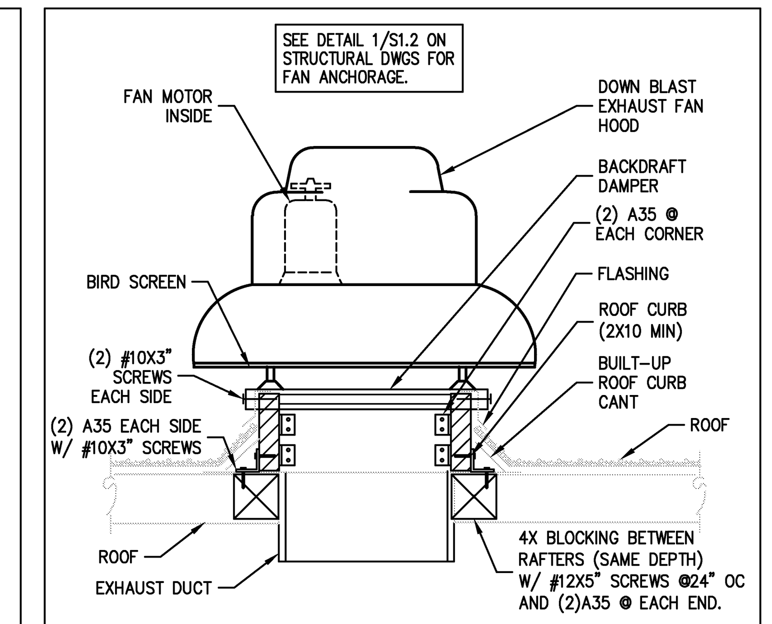

ROOF EXHAUST FAN MOUNTING DETAIL (6)

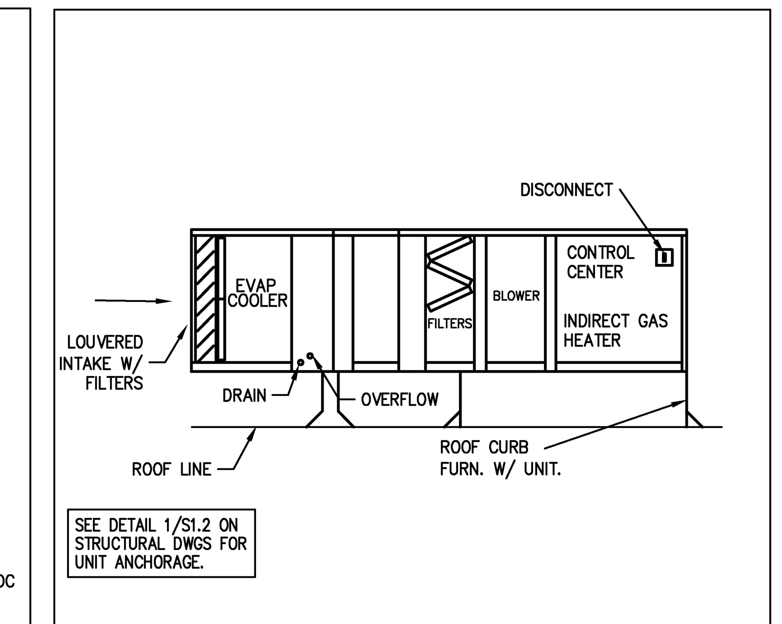

MAKE-UP AIR UNIT DETAIL (5)

TABLE 4-1
RECTANGULAR DUCT HANGERS
MINIMUM SIZE

MAXIMUM HALF OF DUCT PERIMETER	Pair at 10 ft Spacing		Pair at 8 ft Spacing		Pair at 5 ft Spacing		Pair at 4 ft Spacing	
	STRAP	WIRE/ ROD	STRAP	WIRE/ ROD	STRAP	WIRE/ ROD	STRAP	WIRE/ ROD
P/2 = 30"	1" X 22 ga.	10 ga. (.135")	1" X 22 ga.	10 ga. (.135")	1" X 22 ga.	12 ga. (.106")	1" X 22 ga.	12 ga. (.106")
P/2 = 72"	1" X 18 ga.	3/8"	1" X 20 ga.	1/4"	1" X 22 ga.	1/4"	1" X 22 ga.	1/4"
P/2 = 96"	1" X 16 ga.	3/8"	1" X 18 ga.	3/8"	1" X 20 ga.	3/8"	1" X 22 ga.	1/4"
P/2 = 120"	1-1/2" X 16 ga.	1/2"	1" X 16 ga.	3/8"	1" X 18 ga.	3/8"	1" X 20 ga.	1/4"
P/2 = 168"	1-1/2" X 16 ga.	1/2"	1-1/2" X 16 ga.	1/2"	1" X 16 ga.	3/8"	1" X 18 ga.	3/8"
P/2 = 192"	Not Given	1/2"	1-1/2" X 16 ga.	1/2"	1" X 16 ga.	3/8"	1" X 16 ga.	3/8"
P/2 = 193" up	SPECIAL ANALYSIS REQUIRED							

WHEN STRAPS ARE LAP JOINED USE THESE MINIMUM FASTENERS:	SINGLE HANGER MAXIMUM ALLOWABLE LOAD	
	STRAP	WIRE OR ROD (Dia.)
1" x 18, 20, 22 ga. -two #10 or one 1/4" bolt 1" x 16 ga. -two 1/4" dia. 1-1/2" x 16 ga. -two 3/8" dia. Place fasteners in series, not side by side.	1" X 22 ga. - 260 lbs. 1" X 20 ga. - 320 lbs. 1" X 18 ga. - 420 lbs. 1" X 16 ga. - 700 lbs. 1-1/2" X 16 ga. - 1100 lbs.	0.106" - 80 lbs. 0.135" - 120 lbs. 0.162" - 160 lbs. 1/4" - 270 lbs. 3/8" - 680 lbs. 1/2" - 1250 lbs. 5/8" - 2000 lbs. 3/4" - 3000 lbs.

TABLE 4-2
MINIMUM HANGER SIZES FOR ROUND DUCT

Dia.	Maximum Spacing	Wire Dia.	Rod	Strap
10" dn 250 mm dn	12' 3.7 m	One 12 ga. One 2.75 mm	1/4" 6.4 mm	1" x 22 ga. 25.4 x 0.85 mm
11-18" 460 mm	12' 3.7 m	Two 12 ga. or One 8 ga. One 4.27 mm	1/4" 6.4 mm	1" x 22 ga. 25.4 x 0.85 mm
19-24" 610 mm	12' 3.7 m	Two 10 ga. Two 3.51 mm	1/4" 6.4 mm	1" x 22 ga. 25.4 x 0.85 mm
25-36" 900 mm	12' 3.7 m	Two 8 ga. Two 2.7 mm	3/8" 9.5 mm	1" x 20 ga. 25.4 x 1.00 mm
37-50" 1270 mm	12' 3.7 m	→	Two 3/8" Two 9.5 mm	Two 1" x 20 ga. (2) 25.4 x 1.00 mm
51-60" 1520 mm	12' 3.7 m	→	Two 3/8" Two 9.5 mm	Two 1" x 18 ga. (2) 25.4 x 1.31 mm
61-84" 2130 mm	12' 3.7 m	→	Two 3/8" Two 9.5 mm	Two 1" x 16 ga. (2) 25.4 x 1.61 mm

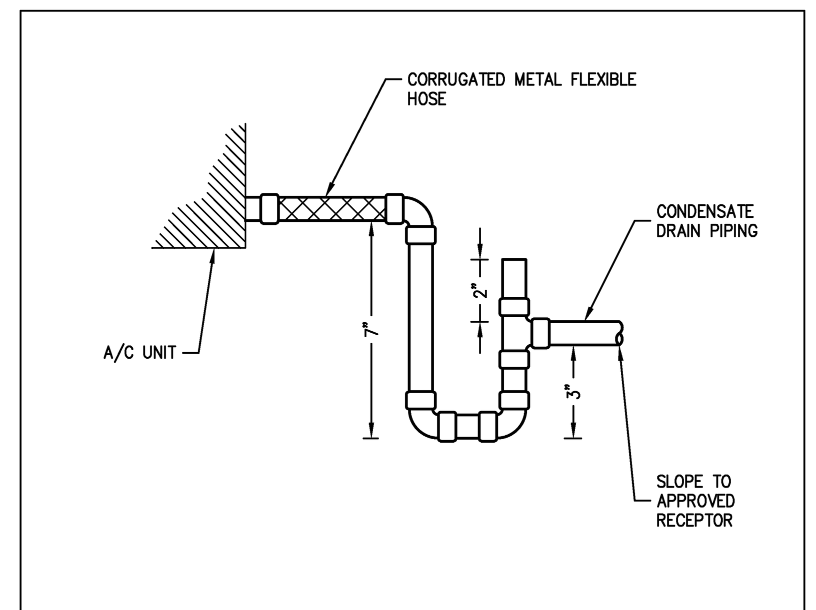

CONDENSATE DRAIN TRAP DETAIL (13)

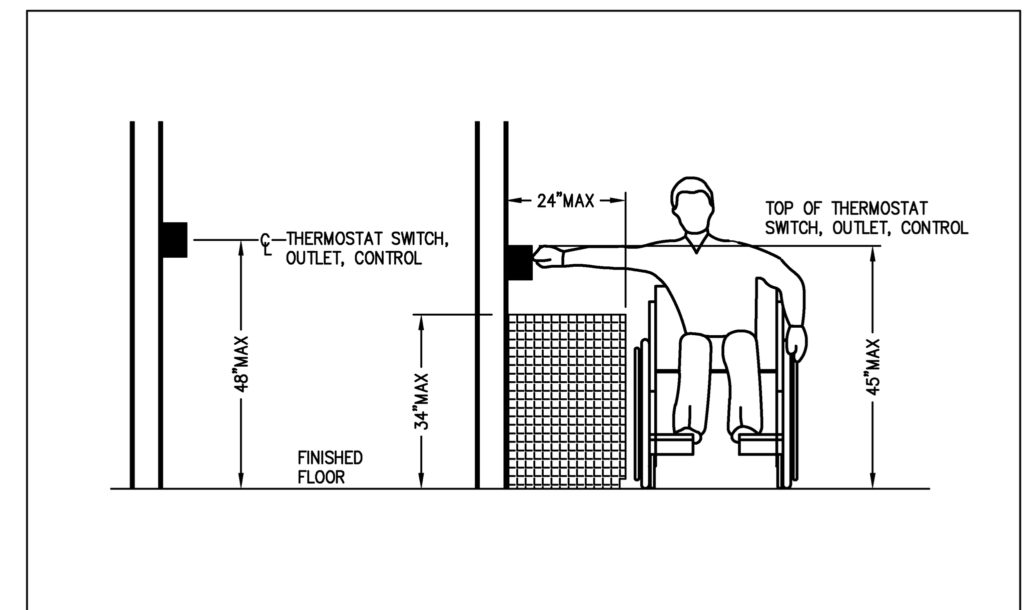

MOUNTING HEIGHT OVER OBSTRUCTION (12)

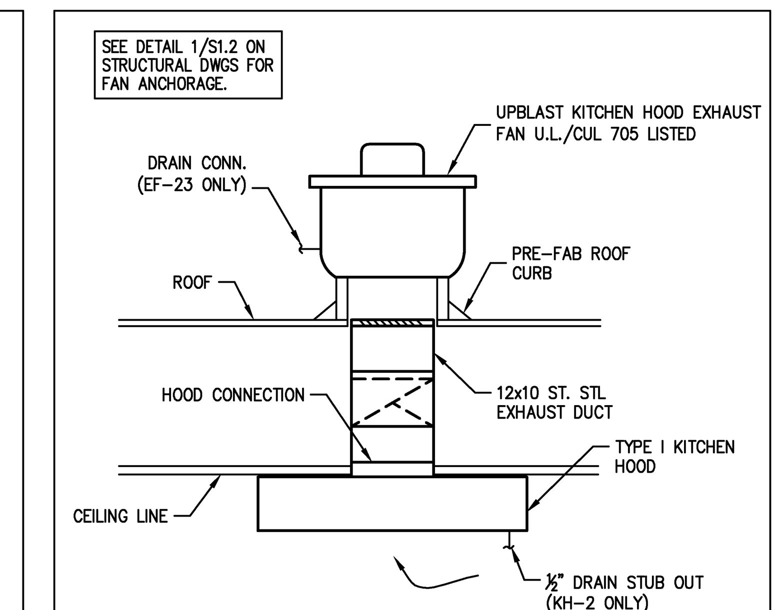

KITCHEN HOOD EXHAUST FAN DETAIL (11)

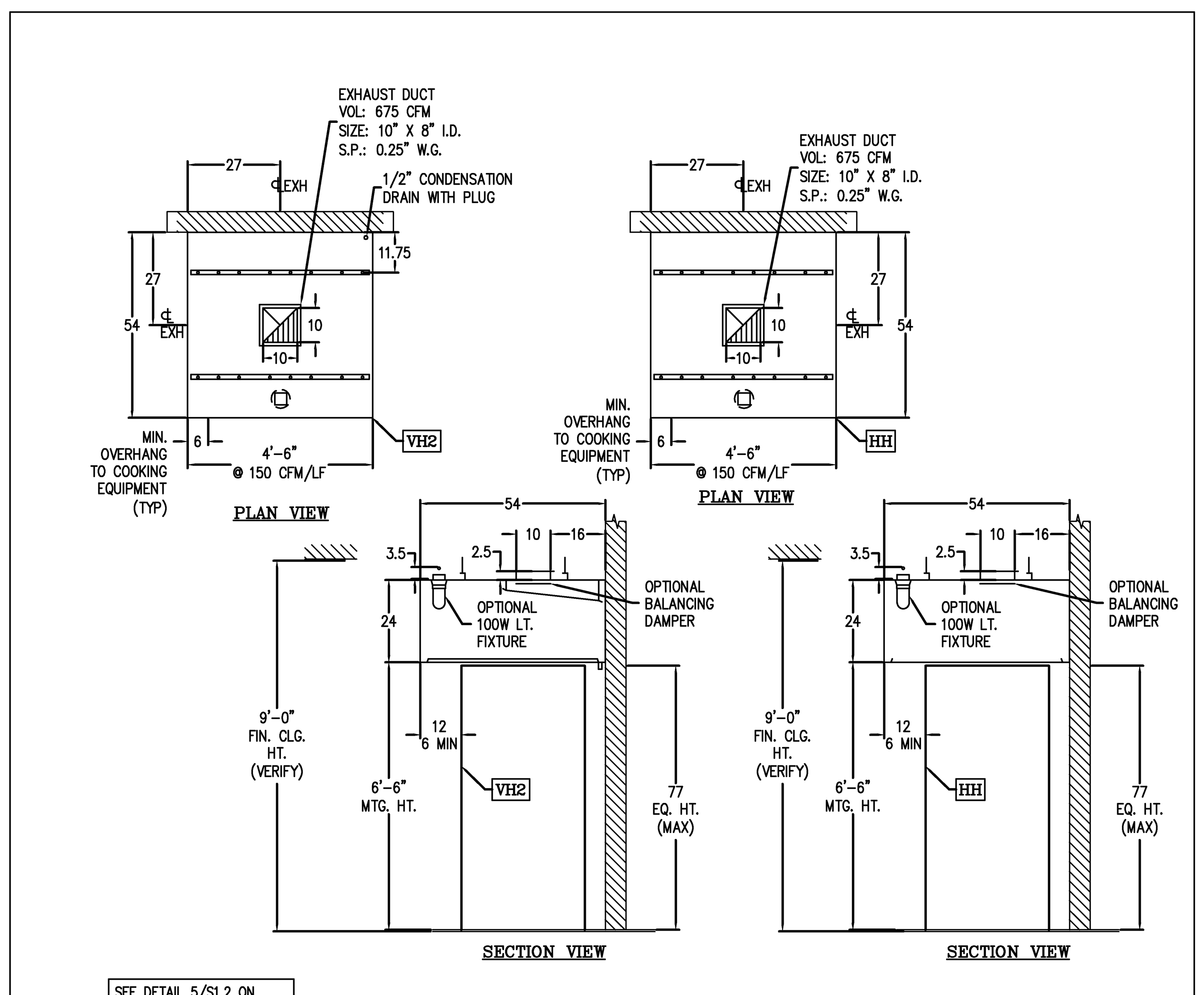

KITCHEN HOODS DETAILS (15)

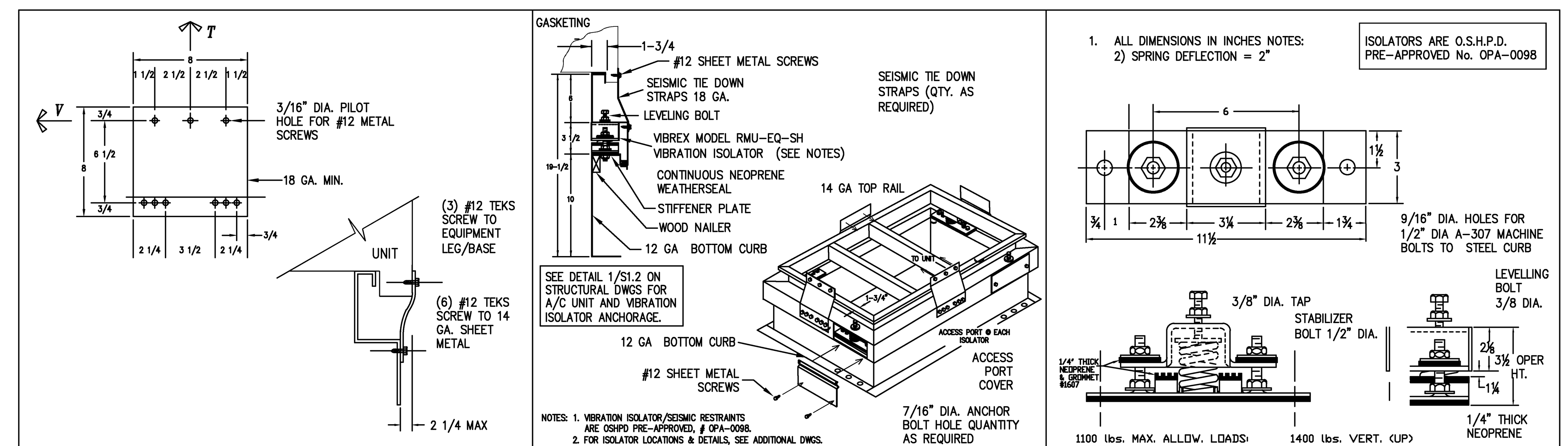

ISOLATOR DETAILS (14)

CONTROL WIRE CABLE SIZE FOR THERMOSTAT SHALL BE 12 AWG MINIMUM WITH SOLID WIRE TYPE.

CONTROL WIRE FOR THERMOSTAT (16)

LICENSED ARCHITECT JAMES M. STINSON C19098 RENEWAL 02/28/13 STATE OF CALIFORNIA

IDENTIFICATION STAMP DIV. OF THE STATE ARCHITECT OFFICE OF REGULATION SERVICES
APPL 04-107199
AC___ FLS___ SS___ DATE___

South Coast Engineering Group, Inc.
5000 N. Pkwy. Calabasas, Suite 307
Calabasas, California 91302
tel (818) 224-2700 fax (818) 224-2711

REVISIONS	DATE

P S W C GROUP
A R C H I T E C T S / P L A N N E R S
1887 BUSINESS CENTER DR., SUITE 3, SAN BERNARDINO, CA. 92408
909/890-2233 FAX. 909/890-2644

ROOSEVELT II
ELEMENTARY SCHOOL
SAN BERNARDINO CITY UNIFIED SCHOOL DISTRICT
1261 W. 16TH STREET, SAN BEERNARDINO, CA.

MECHANICAL DETAILS

SCALE: NONE

REGISTERED PROFESSIONAL ENGINEER PETER A. KRAUT No. M-31498 EXP. 12-31-12 MECHANICAL STATE OF CALIFORNIA

JOB NO. 55B1.02
DRAWN BY LE
DATE 12/09/2011

M-3.0

P:\Project\55B1.02\M\M-3.0.dwg

RE-BID #F09-02 ROOSEVELT II (HENRY) E.S. NEW CONSTRUCTION BID ISSUANCE SET 12/09/11

Drawing Name: P:\Project\55B1.02\M\M-3.0.dwg
Date / Time: Dec 07, 2011 - 11:17am by pcastillo