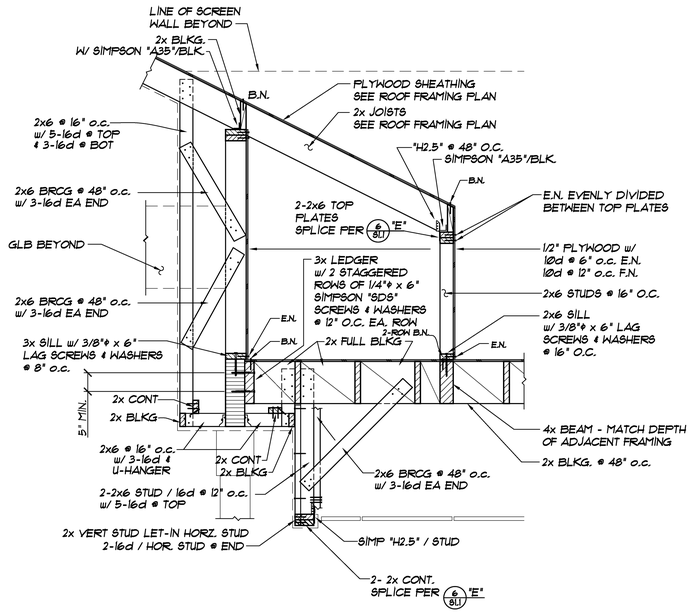

SECTION — SCALE: 3/4" = 1'-0" — A / S4.3

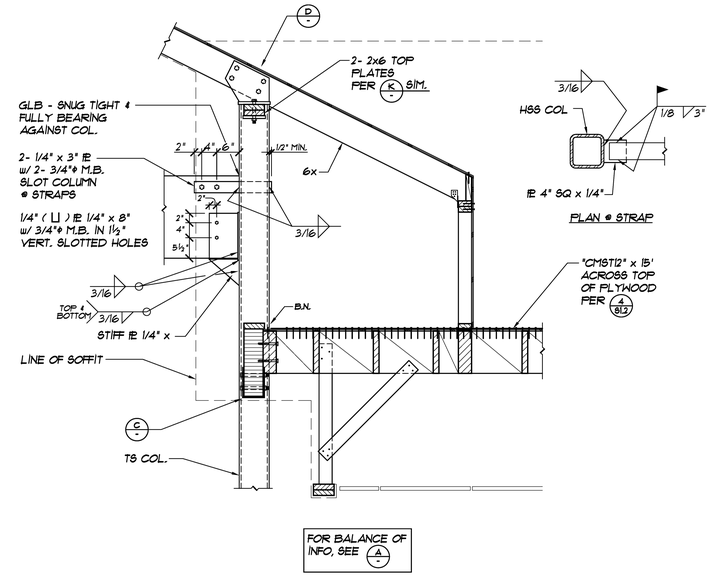

SECTION — SCALE: 3/4" = 1'-0" — B / S4.3

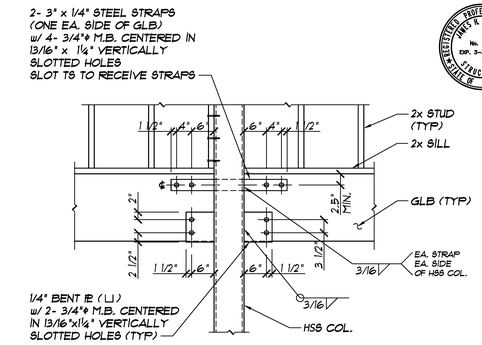

DETAIL — SCALE: 3/4" = 1'-0" — C / S4.3

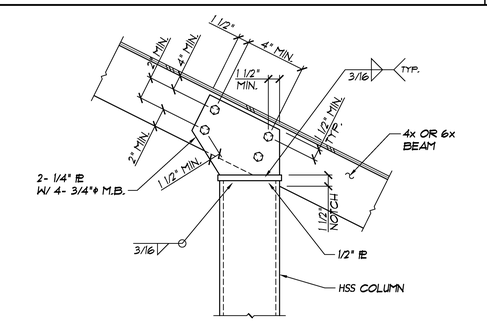

DETAIL — SCALE: 1 1/2" = 1'-0" — D / S4.3

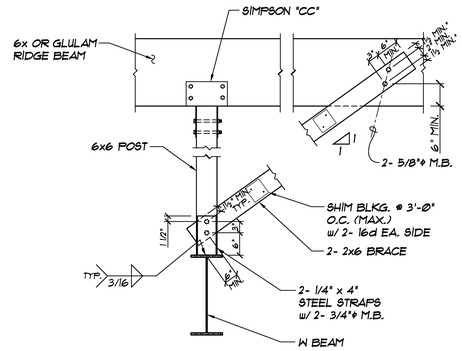

DETAIL — SCALE: 3/4" = 1'-0" — H / S4.3

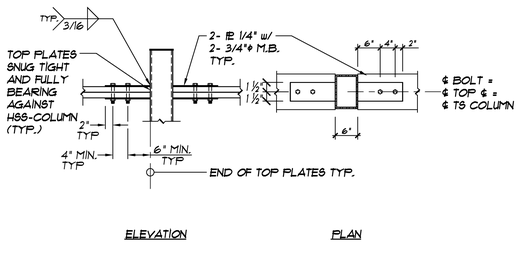

DETAIL — SCALE: 3/4" = 1'-0" — K / S4.3

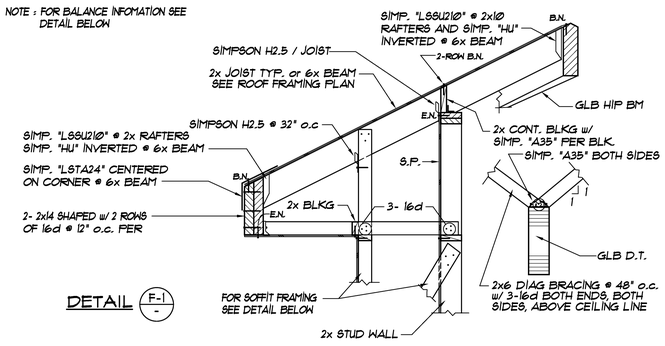

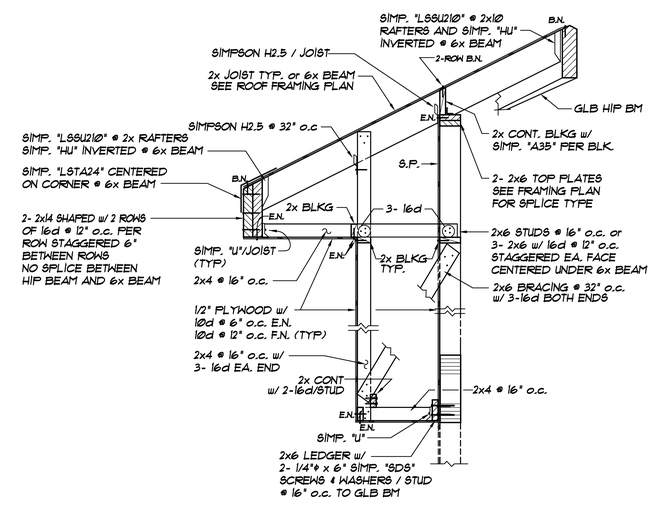

DETAIL — SCALE: 3/4" = 1'-0" — F / S4.3 — F-1 / S4.3

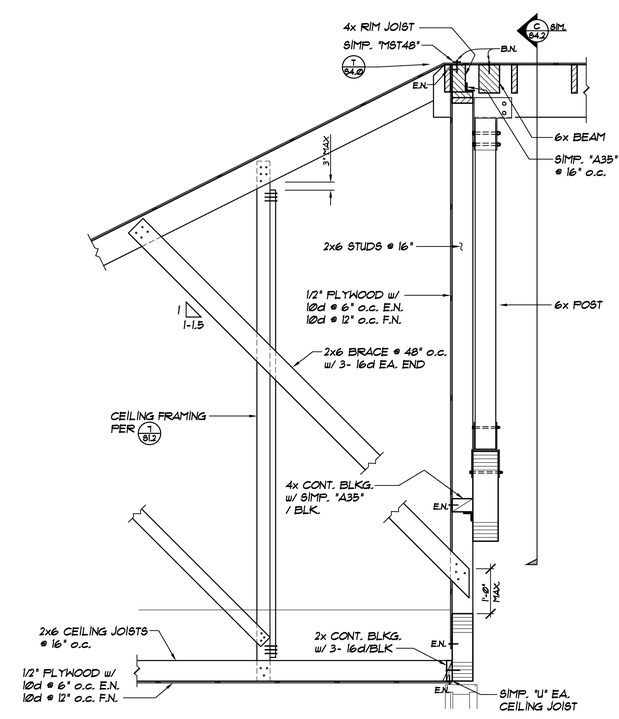

DETAIL — G / S4.3

REGISTERED PROFESSIONAL ENGINEER — HAS & TRANSON — No. 1309 — EXP. 3-31-2015 — STRUCTURAL — STATE OF CALIFORNIA

LICENSED ARCHITECT — JAMES W. RITCHIE — C19098 — RENEWAL 06/08/13 — STATE OF CALIFORNIA

IDENTIFICATION STAMP — DIV. OF THE STATE ARCHITECT — OFFICE OF REGIONAL OVERSIGHT — APPL. 04-107199 — AC. ___ FS. ___ SS. ___ DATE. ___

THOMPSON & ASSOCIATES — STRUCTURAL ENGINEERS — 8122 E. WALNUT STREET — PASADENA, CALIFORNIA 91107 — PH (626)449-2970 — FAX (626)449-4561

REVISIONS

P S W C GROUP — ARCHITECTS / PLANNERS — 1867 BUSINESS CENTER DR., SUITE 9, SAN BERNARDINO, CA. 92408 — 909/890-2623 FAX. 909/890-2644

ROOSEVELT II ELEMENTARY SCHOOL — SAN BERNARDINO CITY UNIFIED SCHOOL DISTRICT — 1261 W. 16TH STREET, SAN BERNARDINO, CA.

SECTIONS & DETAILS — SCALE: AS NOTED

JOB NO. — DRAWN BY — DATE

S4.3

RE-BID #F09-02 ROOSEVELT II (HENRY) E.S. NEW CONSTRUCTION BID ISSUANCE SET 12/09/11

Z:\CURRENT\SAN BERNARDINO SCHOOLS\14-0501 - ALESSANDRO & ROOSEVELT\ACAD\S4-3.dwg 12-07-11-8:38 AM