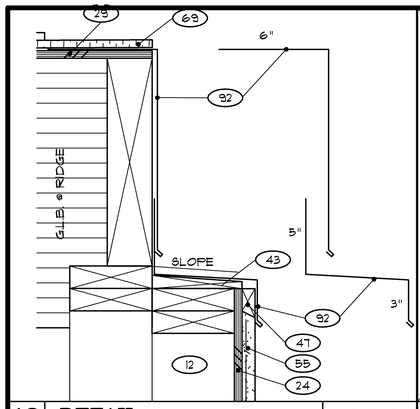

18 DETAIL 3"=1'-0"

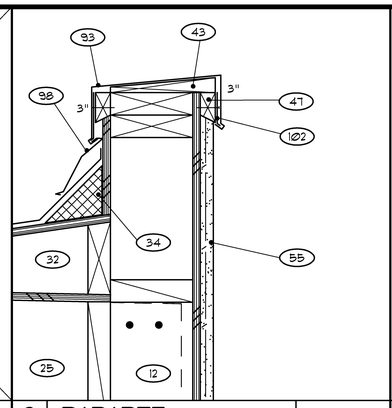

6 PARAPET 3"=1'-0"

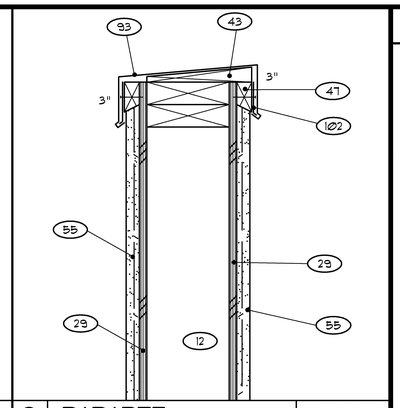

2 PARAPET 3"=1'-0"

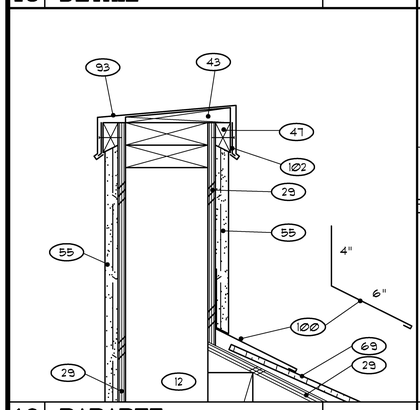

19 PARAPET 3"=1'-0"

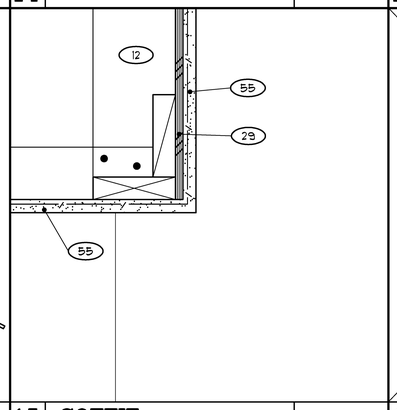

15 SOFFIT 3"=1'-0"

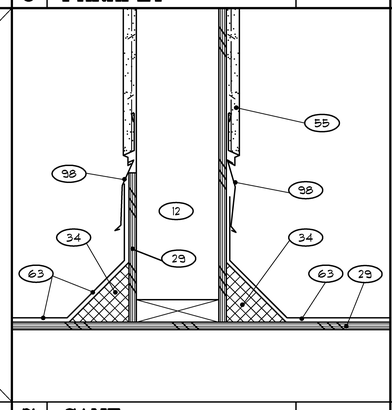

7 CANT 3"=1'-0"

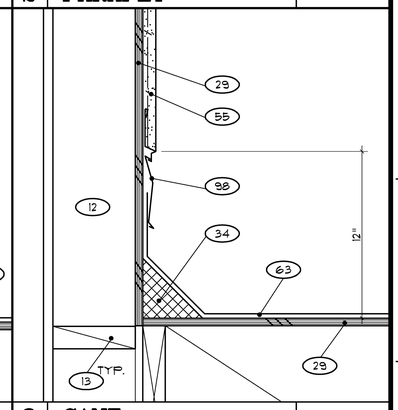

3 CANT 3"=1'-0"

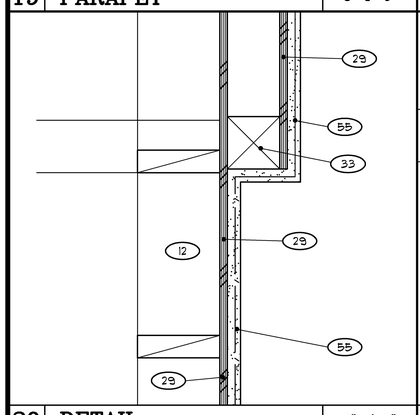

20 DETAIL 3"=1'-0"

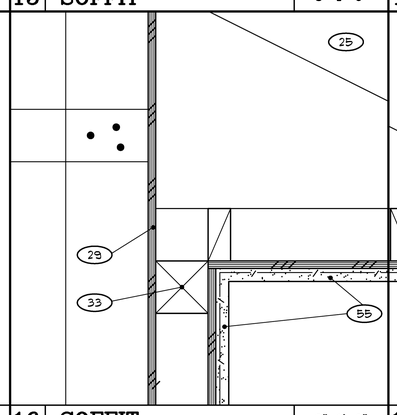

16 SOFFIT 3"=1'-0"

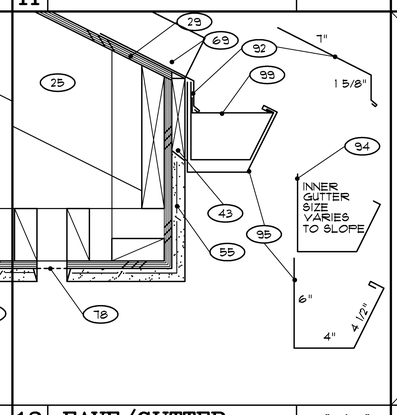

12 EAVE/GUTTER 3"=1'-0"

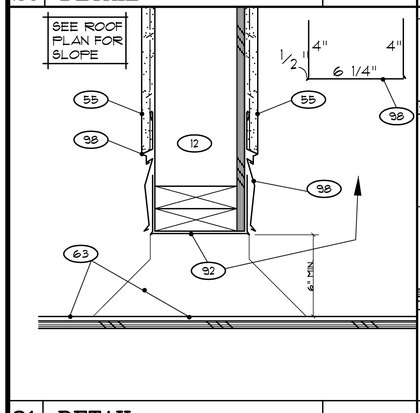

21 DETAIL 3"=1'-0"

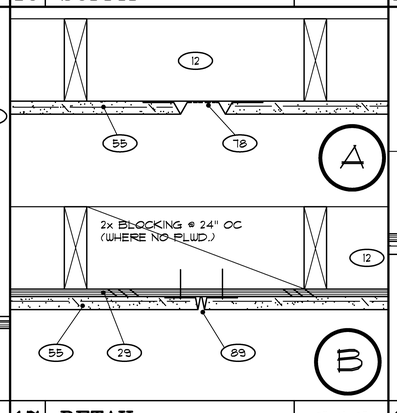

17 DETAIL 3"=1'-0"

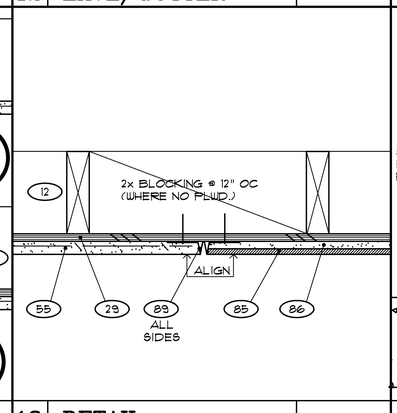

13 DETAIL 3"=1'-0"

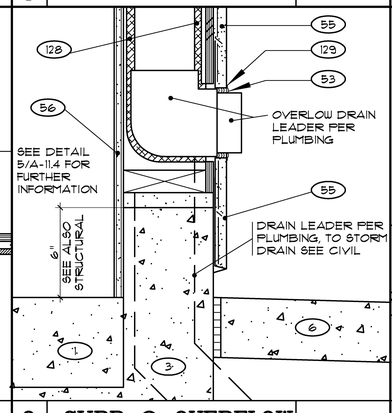

9 CURB @ OVERFLOW 3"=1'-0"

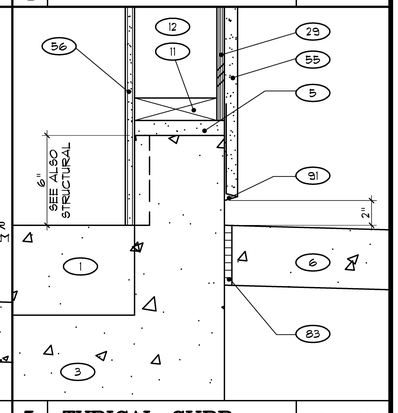

5 TYPICAL CURB 3"=1'-0"

LEGEND

CONCRETE

1 4" CONCRETE SLAB
2 6" CONCRETE SLAB
3 CONCRETE FOOTING PER STRUCTURAL
4 SAND BASE W/ VAPOR BARRIOR
5 DRYPACK PER. STRUCTURAL
6 4"x18" CONCRETE APRON OR CONCRETE PAVING
7 6"x12" CONCRETE CURB
8 -
9 8" C.M.U. BLOCK WALL PER STRUCTURAL
10 -

FRAMING

11 2x SILL PLATE PER STUCTURAL
12 2x FRAMING PER STUCTURAL
13 2x BLOCKING PER STRUCTURAL
14 2x WOOD CEILING FRAMING PER STUCTURAL DTL------
15 2x4 BRACING W/ 16d TOP & BOTTOM @ 48" OC.
16 2x4 DIA. BRACING W/ (3) 16d TOP & BOTTOM @ 48" OC.
17 2x4 CONT.
18 2x6 CONT.
19 2x8 CONT.
20 2x10 CONT.
21 2x12 CONT. **21A** 2x12 @ 32" O.C.
22 2x14 CONT.
23 2x16 CONT.
24 2x FLOOR JOIST PER. STRUCTURAL
25 2x ROOF JOIST PER. STRUCTURAL
26 6x BEAM PER. STRUCTURAL
27 GLU-LAM-BEAM (GLB) PER STRUCTURAL
28 3/8" PLYWOOD SHEATHING
29 1/2" PLYWOOD SHEATHING
30 5/8" PLYWOOD SHEATHING **30A** 3/4"
31 6x BLOCKING
32 WOOD FRAMED CRICKET
33 4x4 CONT.
34 CANT STRIP
35 2"x12" SOLID OAK CAP
36 2x4 @ 16" O.C.
37 2x6 @ 16" O.C.
38 WOOD STARTER STRIP

STEEL

39 TUBE STEEL COLUMN PER. STRUCTURAL
40 PIPE COLUMN PER. STRUCTURAL
41 STEEL ANGLE BRACE PER STRUCTURAL
42 8(d) @ 16" O.C. W/ NEOPRENE WASHER
43 SHAPED WOOD AS DETAILED
44 WOOD POST
45 STEEL BEAM PER. STRUCTURAL **45A** STEEL CHANNEL
46 2x3 NAILER
47 1x2 SHAPED PLASTER STOP
48 2x SHAPED
49 4x6
50 4x BLOCKING
51 2x6 BLOCKING
52 1 1/4"x 3 1/2" SHAPED WOOD

FINISH

53 CAULKING
54 "J" MOULDING
55 7/8" EXTERIOR PLASTER W/ INTERGAL COLOR PAINTED
56 5/8" GYPSUM BOARD
57 5/8" TYPE "X" GYPSUM BOARD
58 (2) LAYERS 5/8" TYPE "X" GYPSUM BOARD
59 FLOOR TILE PER FINISH SCHEDULE/SPEC.
60 WALL TILE PER FINISH SCHEDULE/SPEC.
61 WOOD SIDING
62 2x4 ROUGH SAWN WOOD TRIM (SHAPED AS DETAILED)
63 BUILT-UP ROOFING (CLASS "A")
64 SUSPENDED ACOUSTICALTILE & "T" BAR CEILING
65 WOOD CEILING
66 12"x12" GLU-UP ACOUSTICAL TILE
67 CARPET
68 VCT (VINYL COMPOSITION TILE)
69 ASPHALT SHINGLE ROOFING (CLASS "A")

MISC.

70 STAGE DRAPES
71 FLUID APPLIED WATER PROOFING
72 LIGHT FIXTURE PER. ELECTRICAL
73 DOOR & FRAME PER SCHEDULE
74 GLAZING & FRAME PER SCHEDULE
75 INSULATION PER SPEC.
76 -
77 EXPANSION COVER PER. SPEC.
78 2" VENT PER SPEC. **78A** 2" REVEAL
79 -
80 -
81 WOOD FRAMED COLUMN BEYOND
82 -
83 1/2" FIBEROUS EXPANSION JOINT FILLER, TYP. AT ALL EXTERIOR WALLS, COLUMNS, POSTS, ETC.
84 ELECTRIC PROJECTION SCREEN & HOUSING
85 12"x12" CERAMIC TILE (INSET)
86 MORTAR BED
87 -
88 EXPANSION JOINT KEENE #5 (PAINTED)
89

FLASHING

90 24 GA. G.I. WEEP SCREED PAINTED
91 24 GA. G.I. DRIP FLASHING PAINTED
92 24 GA. G.I. CAP FLASHING PAINTED
93 24 GA. G.I. SLOPED GUTTTER
94 20 GA. G.I. GUTTER PAINTED
95 24 GA. G.I. EXPANSION FLASHING AS DETAILED
96 24 GA. G.I. PLASTER STOP FLASHING AS DETAILED
97 SPRINGLOK FLASHING PER SPEC. **98A** "P" VINLOK
98 24 GA. G.I.x1" STRAP @ 36" O.C.
99 24 GA. G.I. FLASHING PAINTED
100 24 GA. G.I. VALLEY FLASHING PAINTED
101 24 GA. G.I. FLASHING CLEAT @24" O.C.
102 24 GA. G.I. COUNTER FLASHING PAINTED
103 1" "F" MOULDING
104 24" 24 GA. G.I. FLASHING CONT.
105 FULL SOLDERED JOINT
106 -
107 (3) 16d
108 LAG BOLT PER STRUCT.
109 -
110 -
111 STEEL BEAM HANGER PTD.
112 -
113 CAST IRON DRAIN LEADER PER PLUMBING
114 CAST IRON DOME STRAINER PER PLUMBING
115 4" GRAVEL BED
116 -
117 -
118 -
119 -
120 -
121 -
122 1" PLASTIC LAMINATE REVEAL
123 PLASTIC LAMINATE SHELVING
124 PLASTIC LAMINATE BASE CABINET
125 1" MAP RAIL W/ CORK INSERT
126 PLASTIC LAMINATE CASEWORK
127 PIPE INSULATION
128 PLASTER SCREED COLLAR
129 16 GA. S.S. COUNTER
130 14 GA GALV. CHANNEL
131 16 GA. S.S. SPLASH
132 -
133 -
134 SLIDING REVERSABLE MARKERBOARD
135 SLIDING REVERSABLE CHAULKBOARD
136 NYLON GUIDES
137 SLIDING M.B. / C.B. FRAME & ROLLER
138 SLIDING M.B. / C.B. TRACK & MARKER HOLDER
139 -
140 -
141 -
142
143
144
145
146
147
148
149
150
151
152
153
154

LICENSED ARCHITECT JAMES M. SIMMONS C19098 RENEWAL 02/28/ STATE OF CALIFORNIA

DATE	REVISIONS
	1

P S W C GROUP
ARCHITECTS / PLANNERS
1887 BUSINESS CENTER DR., SUITE 3, SAN BERNARDINO, CA. 92408
909/890-2223 FAX. 909/890-2844

ROOSEVELT II
ELEMENTARY SCHOOL
SAN BERNARDINO CITY UNIFIED SCHOOL DISTRICT
1361 W. 19TH STREET, SAN BERNARDINO, CA.

DETAILS

SCALE: AS SHOWN

JOB NO. P530
DRAWN BY
DATE 6/7/2011

A-11.4

RE-BID #F09-02 ROOSEVELT II (HENRY) E.S. NEW CONSTRUCTION BID ISSUANCE SET 12/09/11