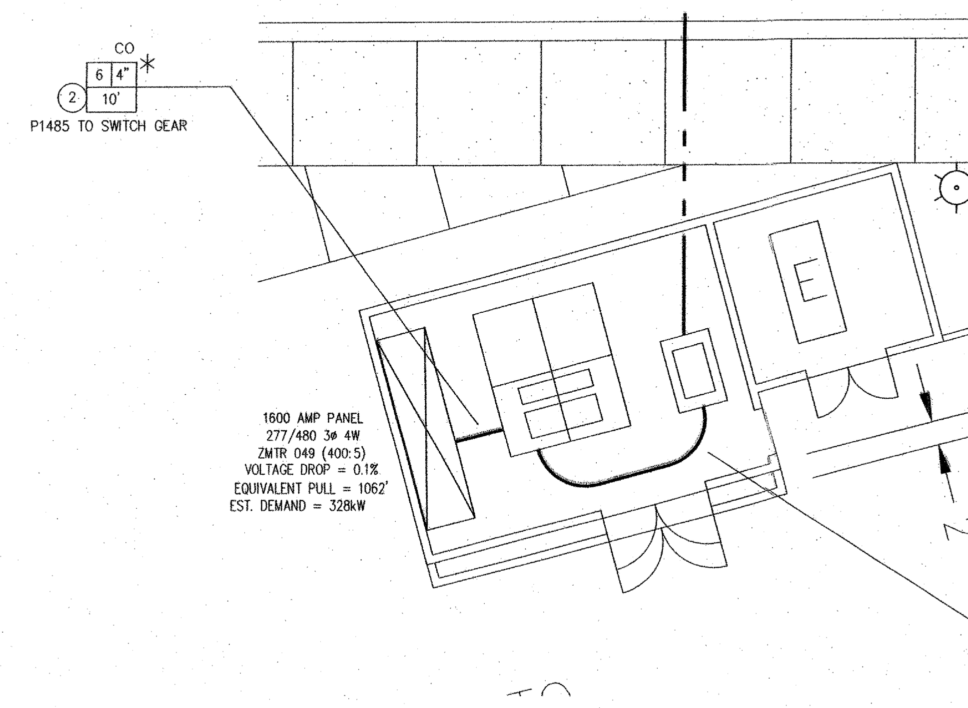

DETAIL "A"

NOTE:
CUSTOMER TO EXTEND FRONT WALL OF ELECTRIC ROOM 2ft. IN ORDER FOR ELECTRICAL EQUIPMENT TO COMPLY WITH SOUTHERN CALIFORNIA EDISONS ELECTRICAL SERVICE REQUIREMENT STANDARDS

1 VAULT EX:V5495577
7' x 14' x 8' (V-714)

IN: 4-WAY JUNCTION BARS
6-1/0 ELBOW (ZUJJ 035)
3-REDUCING TAP PLUG, 600A, 1/0 (FIG. C ZUJJ 423)
3-200A DEAD-END RECEPTACLE (FIG. A ZUJJ 230)
3-1/C, 1/0 AL JCN CABLE - 575' (PRIMARY)

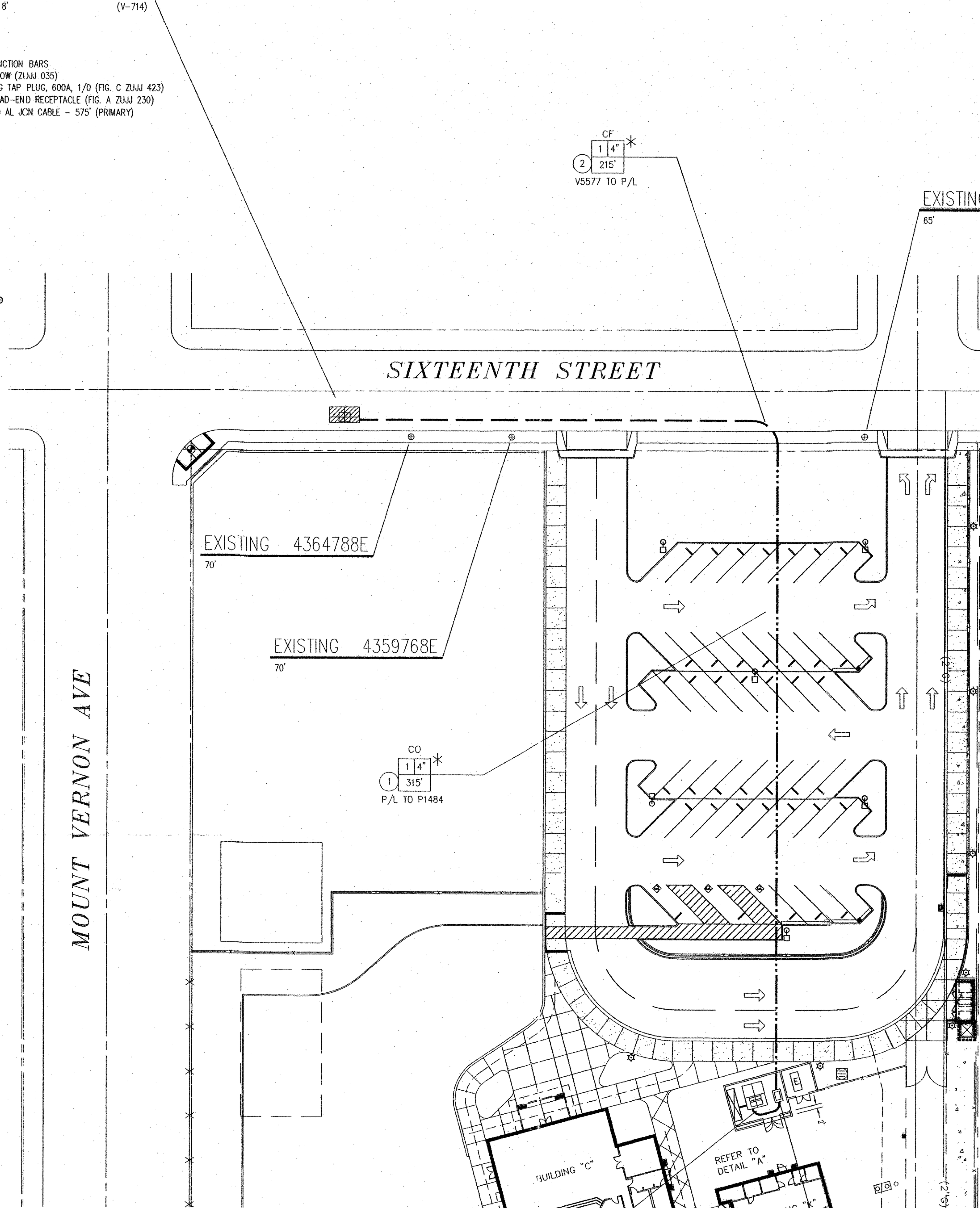

3 SLAB BOX CO: P5611485
10' x 12' (SB-3)
GRD. PER DETAIL

IN: 500kVA 277/480 3ø SW DE XFMR - 12kV

S/N:
ZMTR 049 (400:5)
4-1/C, 3-350 & 1-4/0, (2 RUNS-SECONDARY)
HY-LUGS, 3ø FOR 350

PME5 CO: P5611484 2
4' x 6'
W/2'-6" x 4' BOX
GRD. PER DETAIL
CONTRACTOR TO SUPPLY AND INSTALL A TEMPORARY COVER OVER 30" x 48" OPENING

4' X 6' PAD WITH 2'-6" X 4' BOX
FOR PME-4 & PME-5 SWITCHES

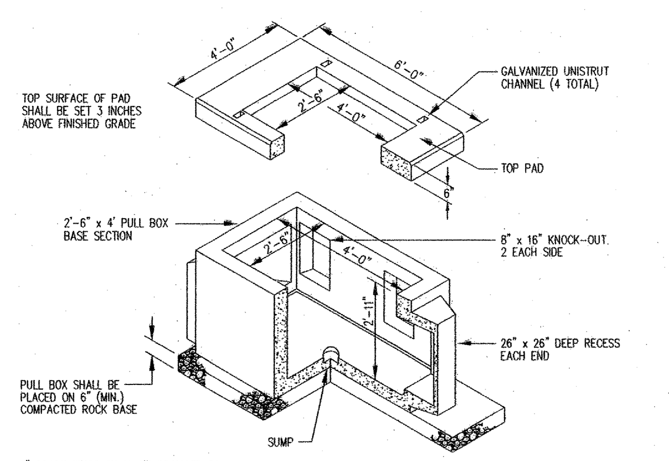

6" GRADE RINGS SHALL BE PROVIDED TO MAINTAIN MINIMUM COVER OVER CONDUITS.

D35 Rev. 06/28/07

10' X 12' PRECAST SLAB-BOX
FOR THREE-PHASE PADMOUNTED TRANSFORMERS
1,500 KVA THROUGH 3,750 KVA

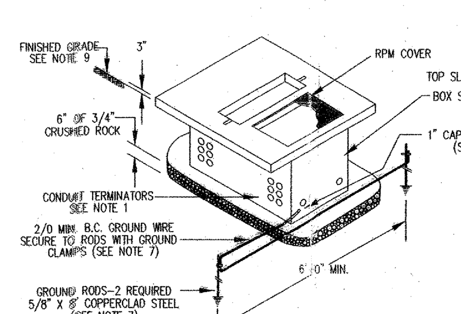

NOTES:
1. CONDUIT TERMINATORS TO BE LOCATED AS SHOWN ON UGS 535.2 TO 535.5. STANDARD CONDUIT ENTRANCE SHALL BE A FLATWALL DESIGN. SLIGHT VARIATIONS BY MANUFACTURERS MAY BE ALLOWED WITH COMPANY APPROVAL.
2. WHEN CABLE TRENCH OPENINGS ARE REQUIRED IN A SLAB BOX, THEY CAN BE SPECIAL ORDERED FROM THE CONCRETE PRECASTER.
3. FOR SLAB BOX STRUCTURAL DESIGN CRITERIA, SEE UGS 535.2, 535.3, 535.4, AND 535.5.
4. FOR LIST OF MATERIAL REQUIREMENTS AND NOTES, SEE UGS 535.6.
5. CONSULT MANUFACTURERS' INSTALLATION GUIDES FOR EXCAVATION DIMENSIONS.
6. AN EIGHT-FOOT MINIMUM CLEARANCE IS REQUIRED DIRECTLY IN FRONT OF TRANSFORMER FOR OPERATION.
7. GROUND RODS, CLAMPS, AND WIRE WILL BE FURNISHED BY CONTRACTOR. SEE UGS 703 FOR APPROVED GROUNDING MATERIALS. GROUND WIRE TO BE A MINIMUM OF 2/0 BARE COPPER. GROUND WIRE TO BE PLACED THROUGH CAPPED ONE-INCH PVC CONDUIT AT EITHER END OF SLAB BOX. A MINIMUM THREE-FOOT LENGTH OF GROUND WIRE SHALL BE PLACED IN SLAB BOX.
8. MASTIC SEALANT IS REQUIRED AT JOINTS.
9. TOP SURFACE OF SLAB BOX SHALL BE SET THREE INCHES ABOVE FINISHED GRADE.
10. SEE UGS 500 FOR APPROVED MAUFACTURERS.

D56 REV. 04/04/01

PROPOSED SINGLE LINE

RAISIN 12KV

0/0 SIXTEENTH STREET SUB

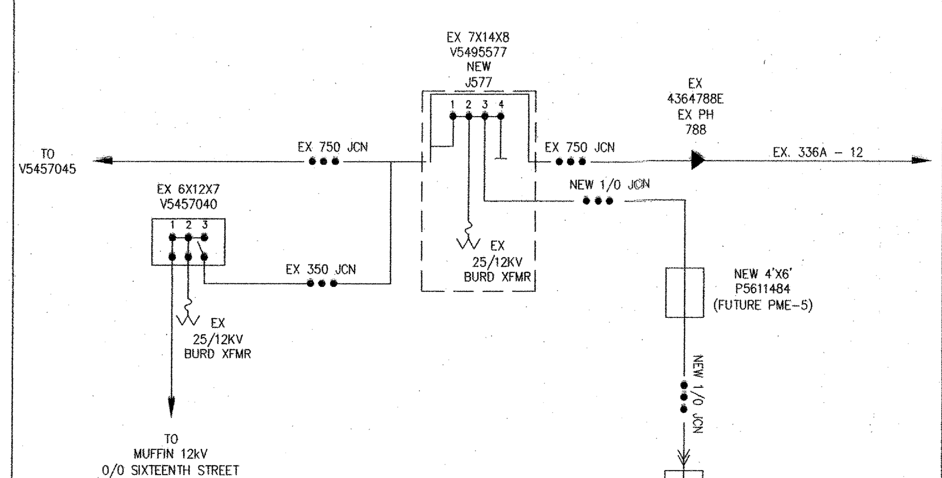

NOTE:
THERE ARE 3 OTHER CIRCUITS IN ADDITION RAISIN 12kV THAT EXPRESS THROUGH VAULT:

LITTLE MOUNTAIN:	33kV
MUFFIN:	12kV
GOODNER:	4kV
COWEN:	4kV

LEGEND OF CONDUIT SYMBOLS
(CONVENTIONAL U.G.)

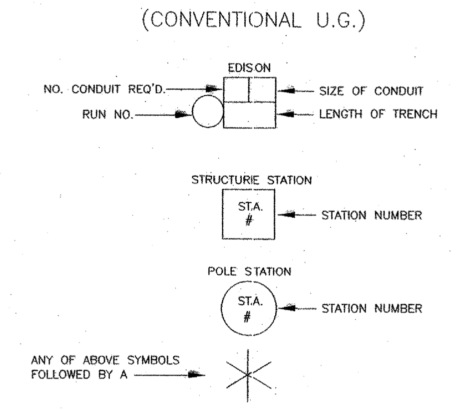

DENOTES THE FOLLOWING:

DB CONDUIT WITHOUT ENCASEMENT IS ACCEPTABLE FOR PORTIONS OF TRENCH WITH ONLY ONE OR TWO CONDUITS.

SEMI-ENCASEMENT IS REQUIRED FOR PORTIONS OF TRENCH WITH ONLY THREE OR FOUR CONDUITS.

FULL ENCASEMENT IS REQUIRED FOR MORE THAN FOUR CONDUITS.

D18: Rev. 5/24/05

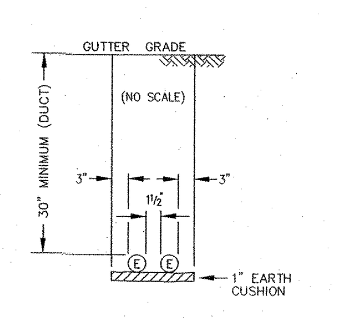

TYPICAL CONDUIT BANK SECTION
SHOWING DIRECT BURIAL
SIMILAR CONSTRUCTION FOR FEWER CONDUIT
2 CONDUITS MAX.

D81: Rev. 4/26/05

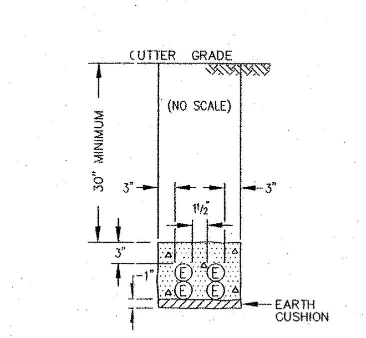

TYPICAL CONDUIT BANK SECTION
SHOWING SEMI-ENCASEMENT
SIMILAR CONSTRUCTION FOR FEWER CONDUITS.
REQUIRED FOR 3 OR 4 CONDUITS

D73: Rev. 5/24/00

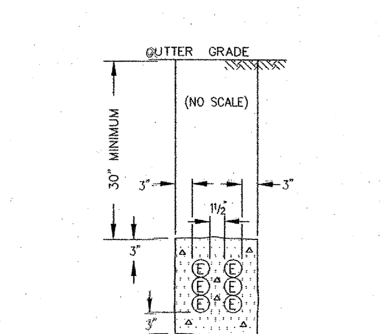

TYPICAL CONDUIT BANK SECTION
SHOWING FULL ENCASEMENT
SIMILAR CONSTRUCTION FOR MORE OR FEWER CONDUIT
REQUIRED FOR MORE THAN 4 CONDUITS

D72: Rev. 12/1/00

PLAN SHOWING PROPOSED
ELECTRIC UNDERGROUND LAYOUT
FOR CUSTOMER INSTALLATION

THIS PLAN APPROVED AS TO LOCATION AND TYPE OF ELECTRIC SUBSTRUCTURES

Developer ____________
Address ____________
Telephone ____________

Dwg./Rev.	Developer's Signature	Date
Original		
Rev.		
Rev.		
Rev.		

CHANGES IN THESE PLANS WILL REQUIRE AN ADDITIONAL 4 TO 6 WEEKS AND CUSTOMER WILL BE CHARGED IN ADVANCE FOR REQUESTED CHANGES.

D26: Rev. 11/20/96

LEGEND CODE DEFINITIONS

CI – CUSTOMER CONTRACTOR INSTALLED: MATERIALS FURNISHED AND INSTALLED BY APPLICANT AT EDISON'S EXPENSE AND ARE DEEDED TO EDISON. (EXCEPTION: STREET LIGHT ELECTROLIERS WILL BE INSTALLED BY EDISON'S CONTRACTOR.)

CO – CUSTOMER CONTRACTOR OWNED: MATERIALS FURNISHED, INSTALLED, OWNED, AND MAINTAINED BY APPLICANT.

CF – CUSTOMER CONTRACTOR FURNISHED: MATERIALS FURNISHED AND INSTALLED BY APPLICANT AT APPLICANT'S EXPENSE THAT MAY BE DEEDED TO EDISON.

IN – INSTALL: MATERIALS FURNISHED AND INSTALLED BY APPLICANT IF APPLICANT INSTALLED PROJECT OR BY EDISON IF EDISON INSTALLED PROJECT. (EXCEPTION: FOR AN APPLICANT INSTALLED LINE EXTENSION. STATION NOS.____
HAVING AN ASTERISK ADJACENT TO AN "IN" LEGEND CODE REPRESENTS MATERIALS TO BE PROVIDED BY APPLICANT AND INSTALLED BY EDISON IN ALL CASES. REFER TO DPB 8258. PROJECT MATERIAL LIST BY ASSEMBLY WITHIN A STATION.)

MI – MEMO INSTALL: SAME AS IN-INSTALL.

MR – MEMO REMOVE: MATERIALS REMOVED BY EDISON.

RM – MEMO REMOVED: MATERIALS REMOVED BY EDISON.

SI – SHOOFLY IN: MATERIALS FURNISHED AND INSTALLED BY EDISON FOR TEMPORARY CONSTRUCTION.

SR – SHOOFLY REMOVE: MATERIALS REMOVED BY EDISON FOR TEMPORARY CONSTRUCTION.

TR – TRANSFER: EDISON LABOR REQUIRED TO TRANSFER EXISTING FACILITIES.

D31: Rev. 11/85

TIE-IN MADE THROUGH SIDE WALL OF STRUCTURE
(Vault, Manhole, PME, SOE/CST, BURD, Slab Box, Pull Box, PMH)
The customer is responsible to trench to the structure entrance point and bring the conduit to within 5' of the structure being entered. The customer is to provide slip coupling and conduit.

CUSTOMER – OWNED CONDUIT MATERIAL* AND CONCRETE ENCASEMENT ARE TO BE INSTALLED IN ACCORDANCE WITH EDISON ELECTRICAL SERVICE REQUIREMENTS.

*SUBJECT TO APPROVAL BY LOCAL INSPECTION AUTHORITIES

D14: Rev. 01/85

CONSTRUCTION NOTES:

Unless otherwise specified on the working drawing which forms a part of the specification, the Contractor/Developer shall furnish the following items at no cost to the Edison Company.
Southern California Edison Company has attempted to correctly show all existing utilities and substructures in the vicinity of the work, but does not guarantee there are no other substructures in the area.
Failure of SCE to show all substructures in their correct location will not be a basis for a claim for extra work, and the contractor shall be resposible for all damages to substructures whether shown or not.

1. FOR GENERAL SPECIFICATIONS SEE UGS-1.

2. CONDUIT:
 a. Minimum cover in street or parkway is 30" below gutter grade, unless noted otherwise.
 b. Minimum cover on private property is 30" below finished grade, unless noted otherwise.
 c. Contractor is to furnish and install approved conduit to Edison specifications per UGS-100.1, 110 AND 120.
 d. For the type of conduit for this job, See UGS-110.1.
 e. Install all risers per UGS-160, 161, 162 and 170.
 f. Cap all mainline conduits per UGS-148 and service conduits per UGS-150.
 g. Install blank conduit plugs in all conduits terminating into Vaults, Manhole's, PMH's, SOE's & all cap locations, per UGS-180.1 & UGS-180.2
 h. Install pull rope in all conduit runs. Pull rope to be 1/4" polypropylene or polyethylene rope, braided or twisted. For specifications, approved makes, and suppliers, see UGS-40.
 i. All conduit must be mandrelled with the approved mandrell UGS-197.

3. CONDUIT RADIUS REQUIREMENTS:
 a: The minimum radius for bends are:
 36" for conduits 3" in diameter or smaller
 48" for conduits 4" and 5" in diameter
 60" for 6" diameter conduit
 b: The minimum radius for all sweeps of all mainline conduits is 12'-6" (unless noted otherwise).

4. EXCAVATION AND BACKFILL:
 a. Work area shall be cleared and rough graded to within four inches of final grade prior to installation of Edison conduit or structures.
 b. All excavations shall be in accordance with the California State Construction Safety Orders (when applicable), Edison specifications, and all governing local ordinances.
 c. Each trench to be a uniform depth below final grade prior to installation of Edison conduit or structures.
 d. Backfill shall be provided by the Contractor for all excavations and shall include crushed rock, concrete, and/or imported backfill, when required.
 e. Backfill with a MINIMUM of one sack per yard sand cement slurry around and over vaults and manholes per UGS-30.3, Par. 6.4 and around PMH's within one foot of finished grade, per UGS-590.1.
 f. Backfill, per Edison specifications, shall immediately follow conduit or substructure installation. At no time shall conduit be left exposed over 24 hours.
 g. No rocks are allowed within 12 inches of direct-buried cables or any conduit without concrete encasement. Native backfill capable of passing through a one-half inch mesh screen shall be considered to be "rock free". If existing backfill does not pass through a 1/2" screen, place imported sand 3" below and 12" above Edison cables. After this point, no rocks larger than 12" diameter are permitted.
 h. All backfill shall be compacted to meet or exceed local ordinances or other requirements. It shall be placed in a manner that will not damage the conduit or substructure or allow future subsidence of the trench or structures.

5. PAVING:
 Repaving, where required, shall be placed in such a manner that interference with traffic, including pedestrian traffic, will be kept to a minimum. The Contractor shall establish a program of repaving acceptable to the Municipality, County, or other authority having jurisdiction and which is acceptible to Edison.

6. STRUCTURES:
 a. All substructures shall be constructed or installed to Edison specifications.
 b. Install protection barriers per UGS-830 when required in areas exposed to traffic, per Edison Inspector.
 c. All conduit lines and concrete floored substructures shall be water tight.
 d. All grounding materials shall be furnished and installed by the Contractor.

7. RETAINING WALLS:
 When required, retaining walls shall be provided by the Developer. Walls are required wherever grade rises more than 18 inches above the structure or 24" above the pad surface at a distance of 5 feet from the same, or in areas subject to erosion. Design and installation must comply with local building ordinances. Refer to Edison Inspector for typical space requirements.

8. PERMITS:
 All permits necessary for excavation shall be provided by the Contractor/Developer.

9. ACCESS:
 Heavy truck access shall be maintained to equipment locations. Structures must be clear of all appurtenances that would obstruct the loading or unloading of equipment.

10. SERVICES:
 a. Meters and services shall comply with Edison Electrical Services Requirements.
 b. Wiring must be in accordance with applicable local ordinances and approved by local Inspection Authorities.

11. LOCATION:
 a. The location of excavations and structures for Edison shall be as shown on the working drawing. No deviation from the planned locations will be permitted unless approved by the Edison Inspector. See UGS-1, Par 2.2.
 b. Actual location of obstructions, storm drains, and/or other foreign utilities to be the responsibility of the Contractor. See UGS-1, Par 2.3.

12. Contractor is to verify location and widths of all sidewalks and driveways prior to street light installation. See UGS-175.1, UGS-175.2 and UGS-175.3.

13. SURVEY:
 Surveying of street improvements, property corners, lot lines, finished grade, etc., necessary for the installation of underground facilities must be completed and markers or stakes placed prior to the start of the installation. In addition, Developer shall maintain the markers during the installation and inspection by Edison. Grade and property line stakes must show any offset measurements.

14. COORDINATION AND SUPERVISION:
 The Developer shall provide supervision over and coordination among the various contractors working within the development in order to prevent damage to Edison facilities. He is responsible for the cost of repairs, replacement, relocation, or other corrections to Edison facilities made necessary by his failure to provide supervision or to otherwise comply with these specifications.

15. TELEPHONE AND OTHER UTILITY REQUIREMENTS:
 The drawing prepared for this job may also cover the facilities to be installed for the telephone company and/or other utility. Any questions concerning details of their installation should be referred to the company concerned.

16. OWNERSHIP:
 Developer is to deed to the Edison Company all structures shown hereon execpt those shown as customer owned.

17. WARRANTY:
 Applicants expressly represent and warrant that all work performed and all material used in meeting Applicants' obligations herein are free from defects in workmanship and are in conformity with Southern California Edison Company's requirements. This warranty shall commence upon receipt by Applicants of Company's final acceptance and shall expire one year from that date. Applicants agree to promptly correct to the Company's satisfaction and that of any governmental agency having jurisdiction and at Applicant's expense any breach of this warranty which may become apparent through inspection or operation of underground electric system by Company during this warranty period.

18. **INSPECTION:**
 Inspection is required during the construction period. A 48 hour advance notice of intent to start construction is required from the contractor to the Southern California Edison Company. Standards of Edison construction requirements are available upon request.

Contact Underground Inspector: ~~DAVE SALAZAR~~ GARRETT MENDEZ Phone: ~~(951) 538-7991~~ (909) 533-7775

Dev. Rev. 03/04/05

Applicants expressly represent and warrant that all work performed and all material used in meeting Applicants' obligations herein are free from defects in workmanship and are in conformity with Southern California Edison Company's requirements. This warranty shall commence upon receipt by Applicants of Company's final acceptance and shall expire one year from that date. Applicants agree to promptly correct to the Company's satisfaction and that of any governmental agency having jurisdiction and at Applicant's expense any breach of this warranty which may become apparent through inspection or operation of underground electric system by Company during this warranty period.

SOUTHERN CALIFORNIA EDISON
An EDISON INTERNATIONAL Company

SCALE: 1 IN = 30 FT

CONCRETE PRODUCTS
Precast concrete item complete with necking, cover, and inserts may be obtained from any of the following approved manufacturers.

JENSEN PRECAST
14221 San Bernardino Ave., Fontana, Calif. 92335
Phone: (909) 350-4111

UTILITY VAULT CO.
10650 Hemlock Ave., Fontana, Calif. 92335
Phone: (909) 428-3700

E41: Rev. 2/28/06

UNDERGROUND SERVICE ALERT
1-800-422-4133
or
1-800-227-2600
Call USA
For Underground Locating
2 Working Days Before You Dig

CONTRACTOR ____________
COST PLUS ☐ FIRM ☐ DEV. ☐
INCLUDES PERM. PAVING YES ☐ NO ☐
PERMIT NUMBER ____________
DATE STARTED ____________
DATE COMPLETED ____________
INSPECTOR ____________
PRECASTER ________ CONDUIT ________

WARNING
THE EXCAVATOR MUST TAKE ALL STEPS NECESSARY TO AVOID CONTACT WITH UNDERGROUND FACILITIES WHICH MAY RESULT IN INJURY TO PERSONS OR DAMAGE TO FACILITIES IN THE AREA. THE INDICATED LOCATIONS OF EDISON UNDERGROUND FACILITIES, AS PROVIDED, ARE BELIEVED TO BE ACCURATE. HOWEVER, THE FINAL DETERMINATION OF EXACT LOCATIONS AND THE COST OF REPAIR TO DAMAGED FACILITIES IS THE RESPONSIBILITY OF THE EXCAVATOR.

SCE-2

DISTRICT 31 – REDLANDS	PROJ. MGR. ED MERCADO PHONE (909) 307-6748	PLANNER ED MERCADO PHONE (909) 307-6748	D.W.O. 6631-2076 / A.I. NO. 9-2034
FOREMAN / TRUCK NO. / P/E	INVENTORY MAP NO. 229-2208-0	THOMAS GUIDE / GRID NO. 084	S.L.W.O. / A.I. NO.
CSD 140 Y X N / BY-PASS CODE / EXISTING CHANGE TO	TLM CHECKED %LOAD	J.P.A. NO.	ASSOCIATED W.O. / A.I. NO.
-3 / -2 / -1	NAME EJM 3/16/09	PROPOSED CONSTRUCTION (LOCATION) ROOSEVELT II ELEMENTARY SCHOOL 1261 SIXTEENTH STREET SAN BERNARDINO	
REV. / APPROVED BY / DATE	CHECKED BY / DRAWN BY / DATE	SHEET 1 OF 1	DWG. NO. TD282451

Southern California Edison Company

RE-BID #F09-02 ROOSEVELT II (HENRY) E.S. NEW CONSTRUCTION BID ISSUANCE SET 12/09/11