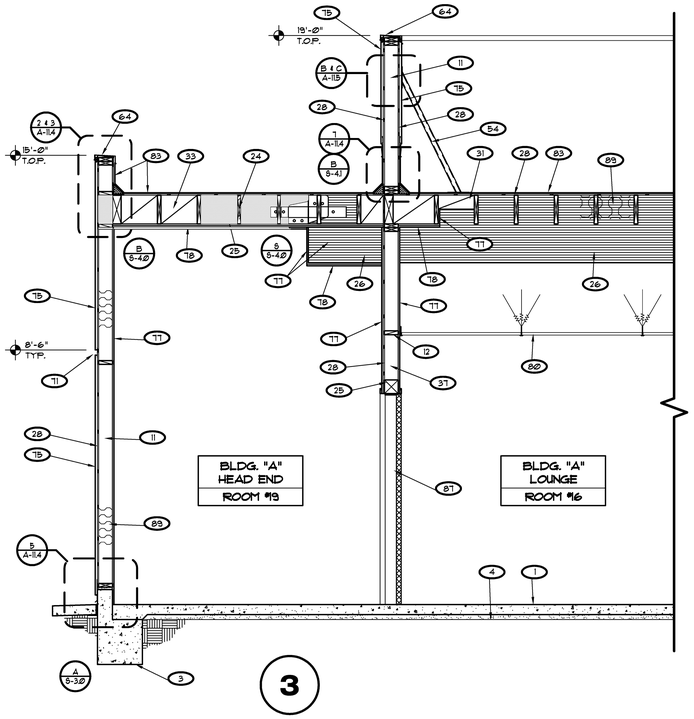

3

BLDG. SECT. B/A-A3
BUILDING "A"

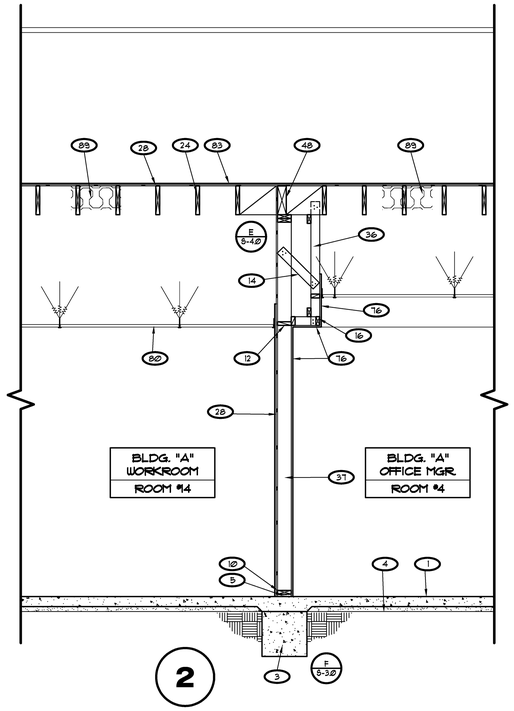

2

BLDG. SECT. B/A-A3
BUILDING "A"

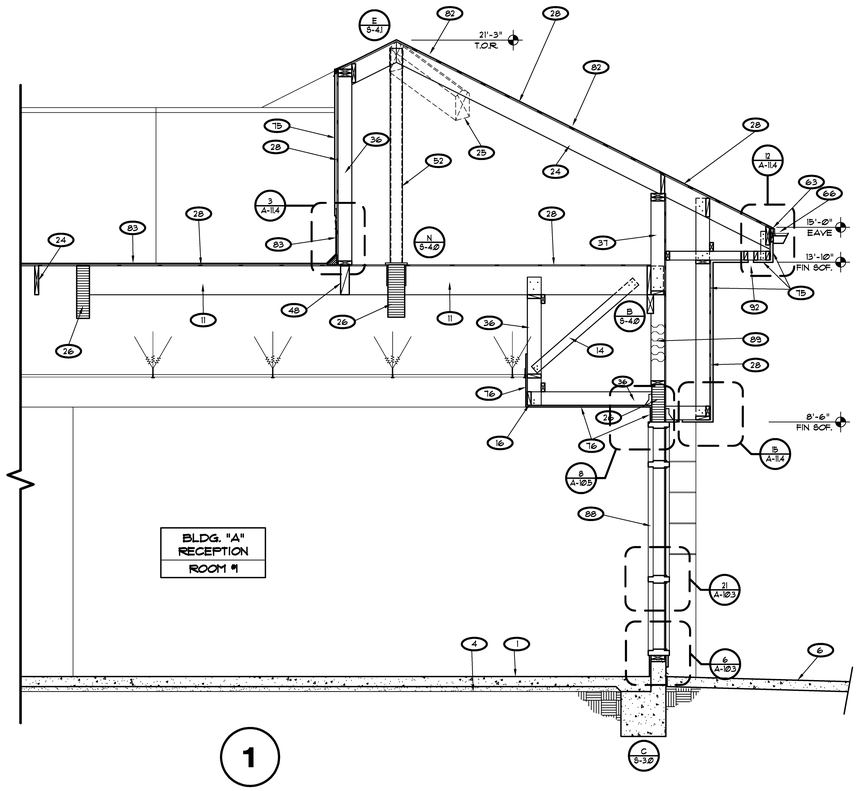

1

BLDG. SECT. B/A-A3
BUILDING "A"

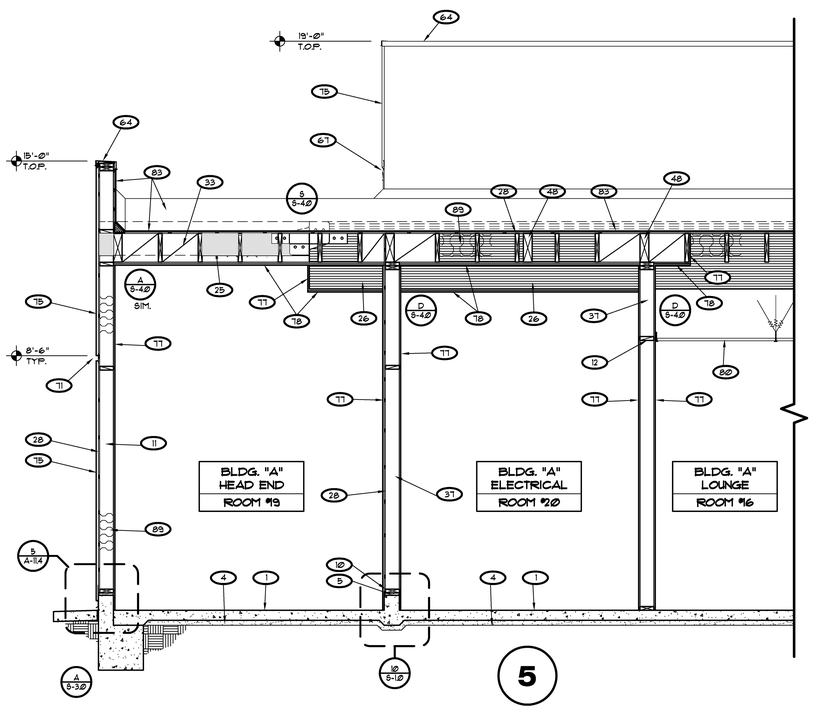

5

BLDG. SECT. A/A-A3

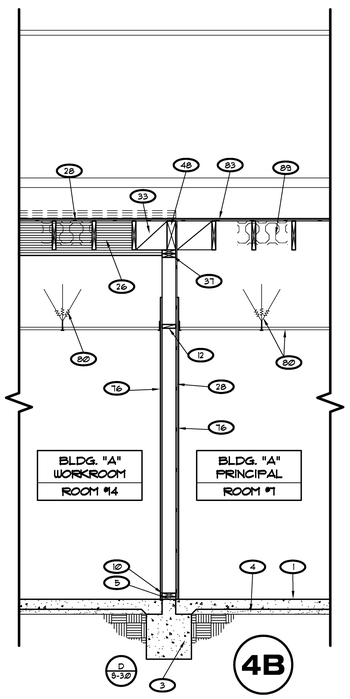

4B

BLDG. SECT. A/A-A3

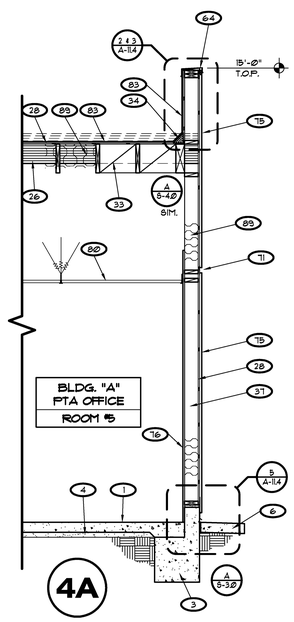

4A

BLDG. SECT. A/A-A3

ABBREVATIONS

F.O.S.	FACE OF STUD	PTD.	PAINTED
T.O.P.	TOP OF PARAPET	MFR.	MANUFACTUER
T.O.R.	TOP OF RIDGE	A.C.	ASPHALT PAVING
T.O.E.	TOP OF EAVE	C.M.U.	CONCRETE MASONRY UNIT
T.O.E.G.	TOP OF EAVE GUTTER	C.I.P.	CAST-IN-PLACE
T.O.S.B.	TOP OF STEEL BEAM	O.C.	ON CENTER
G.A.	GAUGE		ELEVATION INDICATER REFERENCED FROM Ø'-Ø" FINISH FLOOR
G.I.	GALVANIZED IRON		

LEGEND

CONCRETE

1. 4" CONCRETE SLAB
2. 6" CONCRETE SLAB
3. CONCRETE FOOTING PER STRUCTURAL
4. SAND BASE W/ VAPOR BARRIOR
5. DRYPACK PER STRUCTURAL
6. 4"x18" CONCRETE APRON OR CONCRETE PAVING
7. 8" C.M.U. BLOCK WALL PER STRUCTURAL
8. C.I.P. CONCRETE PLANTER SEAT WALL
9. GRADE BEAM PER STRUCTURAL

1A. 2" DEPRESSED SLAB

FRAMING

10. 2x SILL PLATE PER STUCTURAL
11. 2x FRAMING PER STUCTURAL
12. 2x BLOCKING PER STRUCTURAL
13. 2x WOOD CLG. FRAMING PER STRUCTURAL
14. 2x4 BRACING W/ 16d TOP & BOTTOM @ 48" OC. PER STRUCTURAL
15. 2x CEILING JOIST @ 16" O.C. PER STRUCTURAL
15-A. 2x4 STRONG BACK @ 48" O.C. PER STRUCTURAL
16. 2x4 CONT.
17. 2x6 CONT.
18. 2x8 CONT.
19. 2x10 CONT.
20. 2x12 CONT.
21. 2x14 CONT.
22. 2x16 CONT.
23. 2x FLOOR JOIST PER STRUCTURAL
24. 2x ROOF JOIST PER STRUCTURAL
25. 6x BEAM PER STRUCTURAL
26. GLU-LAM-BEAM (GLB) PER STRUCTURAL
27. 3/8" PLYWOOD SHEATHING
28. 1/2" PLYWOOD SHEATHING
29. 5/8" PLYWOOD SHEATHING
30. 3/4" PLYWOOD SHTNG.
31. 6x BLOCKING
32. WOOD FRAMED CRICKET
33. 2x BLOCKING
34. CANT STRIP
35. (3) 16d
36. 2x4 @ 16" O.C.
37. 2x6 @ 16" O.C.
38. 2x12 @ 16" O.C.
39. 2x SHAPED @ 16" O.C.
40. 2x4 FURRING
41. 1 3/8" WOOD FURRING
42. LEDGER PER STRUCTURAL
43. 4x4 CONT.
44. 2x SHAPED TREAD
45. SHAPED WOOD AS DETAILED
46. WALL / CLG. FRAMING PER STRUC.
47. WOOD POST PER STRUCTURAL
48. 4x BEAM PER STRUCT.
49. 6x6 PER STRUCT.
50.

STEEL

51. STEEL BEAM PER STRUCTURAL
52. TUBE STEEL COLUMN PER STRUCTURAL
53. PIPE COLUMN PER STRUCTURAL
54. STEEL ANGLE BRACE PER STRUCTURAL
55. LAG BOLT PER STRUCTURAL
56. TUBE STEEL BEAM PER STRUCTURAL
57. STEEL "C" CHANNEL PER STRUCTURAL
58. STEEL GUSSET - GRID EDGE & SAND SMOOTH. (TO BE PAINTED.)
59. STAINLESS STEEL CLOSURE PANEL
60.

FLASHING

61. 24 GA. G.I. CRICKET FLASHING COVER
62. 24 GA. G.I. WEEP SCREED PAINTED
63. 24 GA. G.I. DRIP FLASHING PAINTED
64. 24 GA. G.I. CAP FLASHING PAINTED
65. 24 GA. G.I. EXPANSION COVER PAINTED
66. 24 GA. G.I. GUTTER
67. SPRINGLOK FLASHING PER SPEC.
68. DOWNSPOUT LEADER
69. DRAIN LEADER @ OVERFLOW
70. EXPANSION COVER AS DETAILED
71. 2" REVEAL

FINISH

72. 1 X 4 T & G WOOD
73. FABRIC PANELS
74. -
75. 7/8" EXTERIOR PLASTER W/ INTERGAL COLOR PAINTED
76. 5/8" GYPSUM BOARD
77. 5/8" TYPE "X" GYPSUM BOARD
78. (2) LAYERS 5/8" TYPE "X" GYPSUM BOARD
79. WALL TILE PER FINISH SCHEDULE/SPEC.
80. SUSPENDED ACOUSTICALTILE & "T" BAR CEILING
81. NOT USED
82. ASPHALT SHINGLES ROOFING
83. BUILT-UP ROOFING (CLASS 'A')
84. 12"x12" GLU-UP ACCUSTICAL TILE
85. CERAMIC TILE

MISC.

86. FLUID APPLIED WATER PROOFING
87. DOOR & FRAME PER SCHEDULE
88. GLAZING & FRAME PER SCHEDULE
89. INSULATION PER SPEC. 89A. SOUND INSULATION PER SPEC
90. NOT USED
91. 24"H x 36"W RATED ACCESS DOOR ABOVE OR IN CEILING BY J.L. INDUSTRIES - U.L. #R3286-1 (OR APPROVED EQUAL)
92. 2" VENT SCREEN- SEE 17A/A-11.4 & RCP FOR LOCATIONS
93. FREEZER / REF. PER MFR.
94. 1 1/2" ROUND STEEL HANDRAIL (TO BE PAINTED) REF. DET. 11 & 12/A-1.3
95. LIGHT FIXTURE PER ELECTRICAL
96. STAINLESS STEEL (9.5') COUNTER
97. MECHANICAL DUCT PER MECHANICAL
98. MECHANICAL REGISTER PER MECHANICAL
99. MONOCOAT 1 HR. FIRE PROTECTION
100. 4'x 8' SMOKE HATCH
101. ELECTRIC PROJECTION SCREEN
102. STAGE DRAPES W/ VALENCE
103. 1 1/2" ROUND GALV. STEEL HANDRAIL (TO BE PAINTED)
104. 24 GA. SHEET METAL WRAP
105. ROOF ACCESS HATCH & LADDER SEE 13 & 14/A-11.2
106. 1/2" FIBER EXPANSION JOINT, TYPICAL AT ALL EXTERIOR WALLS, COLUMNS, POSTS, ETC.

NOTES

1. STRUCTURAL DRAWINGS SHALL TAKE PRESIDENT OVER ANY DETAILS REFERENCED TO STRUCTURAL FROM ARCHITECTURAL WALL SECTIONS.
2. ALL WOOD FRAMING PENETRATING ANY ONE HOUR FIRE RATED WALL OR ROOF SHALL HAVE A 24GA. SHEET METAL WRAP EXTENDING INTO FIRE ASSEMBLY AND 12" OUT. SEE DETAIL

LICENSED ARCHITECT JAMES M. SHIMMIN C19096 RENEWAL 05/29/ STATE OF CALIFORNIA

REVISIONS	DATE

P S W C GROUP
ARCHITECTS / PLANNERS
1867 BUSINESS CENTER DR., SUITE 3, SAN BERNARDINO, CA. 92408
909/890-2223 FAX. 909/890-2844

ROOSEVELT II
ELEMENTARY SCHOOL
SAN BERNARDINO CITY UNIFIED SCHOOL DISTRICT
1261 W. 14TH STREET, SAN BERNARDINO, CA.

WALL SECTIONS

SCALE 1/8" = 1'-0"

JOB NO. PS20
DRAWN BY
DATE 6/7/2011

A-7.1

RE-BID #F09-02 ROOSEVELT II (HENRY) E.S. NEW CONSTRUCTION BID ISSUANCE SET 12/09/11