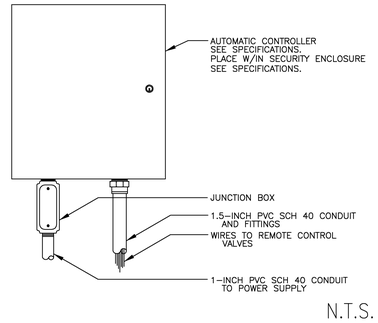

(A) AUTOMATIC CONTROLLER

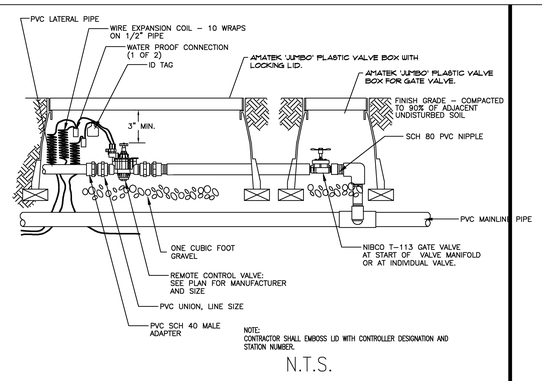

(B) REMOTE CONTROL VALVE W/ GATE VALVE

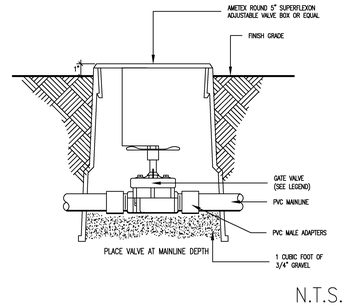

(C) GATE VALVE

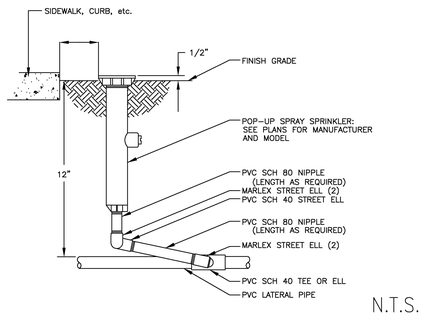

(D) POP-UP SPRAY HEAD

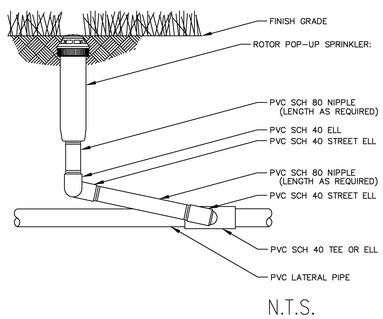

(E) ROTOR

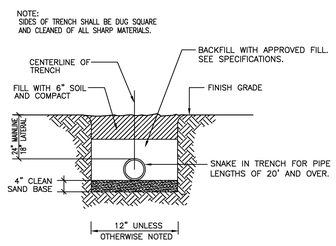

(F) PIPE TRENCH

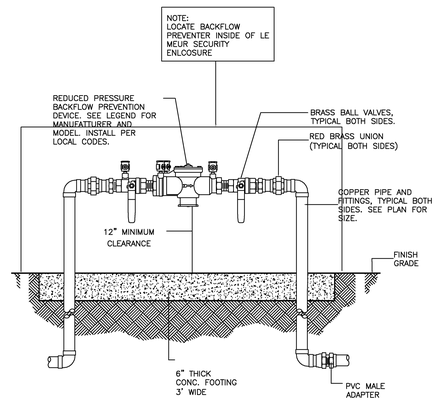

(G) BACK FLOW DEVICE

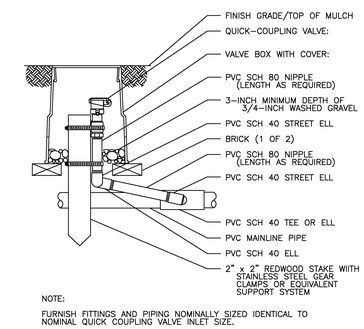

(H) QUICK COUPLING VALVE

IRRIGATION LEGEND

SYMBOL				MFG/MODEL NO./NOZZLE	PATTERN	FLOW GPM	PSI	DET.
F	3/4	2/3	1/2 1/3 1/4	V				
OVERHEAD SPRAY HEADS								
				TORO 570-XX-PRX-COM-5-H,-Q,-ADJ	5'R	0.19,0.09 VARIES	30	--
				TORO 570-XX-PRX-COM-8-H,-Q,-ADJ	8'R	..50, .24, VARIES	30	--
				TORO 570-XX-PRX-COM-10-F,-H,-Q,-ADJ	10'R	0.71,0.40, VARIES	30	--
				TORO 570-XX-PRX-COM-12-F-H,-Q,-ADJ	12'R	2.19,1.09,.50, VARIES	30	--
				TORO 570-XX-PRX-COM-15-F-H,-Q,-ADJ	15'R	3.6,1.65,0.85, VARIES	30	--
				TORO 570Z-XX-PRX-COM-4SST, -4EST	4' X 30', 4'X 15'	0.9, 0.45	30	--
BUBBLER HEADS								
				TORO 570Z-XX-PRX-COM-FB-25-PC INSTALLED IN 4" POP-UP HEAD (1 PER SYMBOL)	FLOOD	.25	40	--
				TORO 570Z-XX-PRX-COM-FB-25-PC 2 PER SYMBOL , TO BE NOZZLE INSTALLED ON NIPPLE W/IN 3" DIA. X 36" DEEP GRAVEL FILLED PERFORATED PIPE.	FLOOD	.25 X 2 =.5 TOTAL	40	--
				RAINBIRD 3504-FC,-PC-SAM-R-SS		1.69	35	
				RAINBIRD 5505-SS-4		2.9	50	
				RAINBIRD 8005-SS-10		9.3	50	

SYMBOL	MFG/MODEL NO./NOZZLE
M	2" WATER METER (BY OTHERS)
	REDUCED PRESSURE BACK FLOW ASSEMBLY, FEBCO MODEL 825Y-2" W/ WYE STRAINER. INSTALL W/IN LE MEUR SECURIY ENCLOSURE.
	FLOW SENSOR AND MASTER VALVE. CONTRACTOR TO INSTALL MASTER VALVE DOWN STREAM FROM BACK FLOW DEVICE AND FLOW SENSOR. GRISWOLD MODEL 2265-2" MASTER VALVE. DATA INDUSTRIAL FLOW SENSOR, MODEL 220P-1.5.
	SUPERIOR 950DWPRS PRESSURE REGULATING REMOTE CONTROL VALVE (SIZE PER PLAN) WITH UPSTREAM SHUT-OFF VALVE(S.O.V.) PLACED AHEAD OF EACH INDIVIDUAL RCV OR GROUP OF RCV'S. S.O.V. TO BE NIBCO T-113-IRR ALL BRASS, LINE SIZED W/ BRASS OR GALV. NIPPLES BETWEEN VALVE AND MAIN LINE.
	QUICK COUPLING VALVE, RAIN BIRD MODEL 33-DRC WITH LOCKING COVER.
	BRASS GATE VALVE, NIBCO T-113.
	CALSENSE ET 2000e - 32 STATION CONTROLLER(WALL MOUNT). 110V ELECTRICAL TO BE PROVIDED BY OTHERS. PLACE WITHIN SECURITY ENCLOSURE VERIFY LOCATION IN FIELD.
	CALSENSE ET 2000e - 40 STATION CONTROLLER(WALL MOUNT). 110V ELECTRICAL TO BE PROVIDED BY OTHERS. PLACE WITHIN SECURITY ENCLOSURE. VERIFY LOCATION IN FIELD.
	LATERAL LINE, SCH 40 PVC, PACIFIC PLASTICS, INC. OR EQUAL. PROVIDE 18" OF COVER FROM FINISH GRADE TOP OF PIPE. PROVIDE 4" CLEAN SAND BASE.
	PRESSURE MAIN LINE, SCH. 40 SIZES TO 1-1/2", CLASS 315 2" AND LARGER. PROVIDE 24" OF COVER FROM FINISHED GRADE TO TOP OF PIPE.PACIFIC PLASTICS INC., OR EQUAL. PROVIDE 4" CLEAN SAND BASE.

VALVE SIZE
1 A2 — CONTROLLER AND STATION DESIGNATION
37.2 — FLOW IN GPM

** USE 6" POP UP BODIES IN GROUND COVER/SHRUB AREAS AND 4" POP UP BODIES IN ALL TURF AREAS.

SLEEVES, SCH. 40 PVC, 2X DIAMETER FOR PRESSURE MAIN LINE AND LATERALS, 2" DIAMETER MINIMUM FOR CONTROL AND COMMON WIRES. PROVIDE 36" OF COVER FROM FINISHED GRADE TO TOP OF PIPE. SLEEVES TO BE USED UNDER ALL HARDSCAPE SURFACES. ALL SLEEVES TO INCLUDE A TRACER WIRE.

LOCATE SPRINKLERS WITH POP-UP SPRAYS 12" AWAY FROM BUILDINGS, 4" AWAY FROM PAVED AREAS OR PARKING STALLS, AND WHERE TREES DO NOT INTERFERE WITH SPRAY PATTERN.

AN UPSTREAM SHUT-OFF VALVE SHALL BE PLACED AHEAD OF EACH REMOTE CONTROL VALVE OR GROUP OF VALVES. REFER TO DETAIL AND LEGEND.

LATERAL LINE, SCH 40 PVC, PROVIDE 18" OF COVER FROM FINISH GRADE TOP OF PIPE. PROVIDE 4" CLEAN SAND BASE.

PRESSURE MAIN LINE, SCH. 40 SIZES TO 1-1/2", CLASS 315 2" AND LARGER. PROVIDE 24" OF COVER FROM FINISHED GRADE TO TOP OF PIPE. PROVIDE 4" CLEAN SAND BASE.

STUDIO
LANDSCAPE ARCHITECTURE
Robert Crandall
Landscape Architect
CA Lic. No. 3360
3272 Jessica Street
Newbury Park, CA 91320
(805) 890-0441

REGISTERED LANDSCAPE ARCHITECT ROBERT CRANDALL NO. 3360 EXP. 2/12 STATE OF CALIFORNIA

REGISTERED ARCHITECT JAMES M. SYMINGTON C19088 RENEWAL 02/28/13 STATE OF CALIFORNIA

REVIEWED FOR SCHOOL SITE APPROVAL DIV. OF THE STATE ARCHITECT OFFICE OF REGULATION SERVICES
APPL 04-107199
AC ____ FLS ____ SS ____
DATE ____

REVISION
1
2
3
4
5

P S W C GROUP
ARCHITECTS / PLANNERS
1887 BUSINESS CENTER DR., SUITE 3, SAN BERNARDINO, CA. 92408
909/890-2233 FAX. 909/890-2644

ROOSEVELT II
ELEMANTARY SCHOOL
SAN BERNARDINO CITY UNIFIED SCHOOL DISTRICT

IRRIGATION LEGEND & DETAILS

JOB NO.
DRAWN BY BC
DATE 12/9/11

L-3

RE-BID #F09-02 ROOSEVELT II (HENRY) E.S. NEW CONSTRUCTION BID ISSUANCE SET 12/09/11