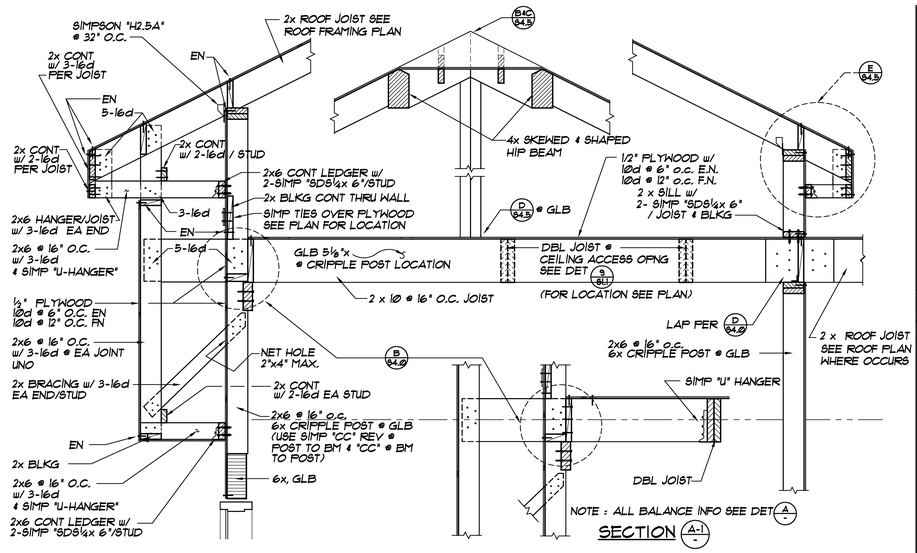

SECTION — SCALE: 3/4" = 1'-0" — A / S4.5

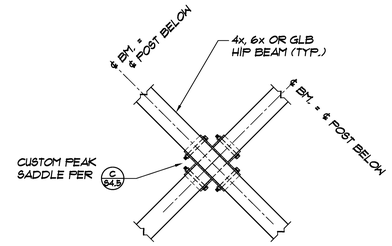

PLAN — SCALE: 3/4" = 1'-0" — B / S4.5

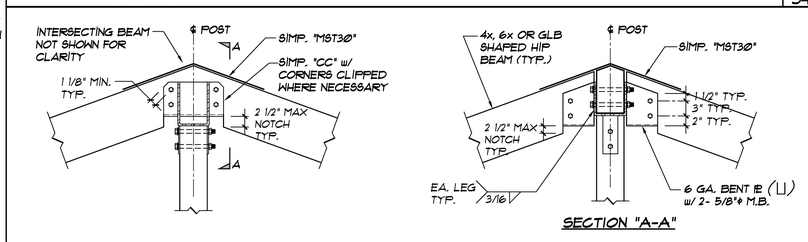

DETAIL — SCALE: 1" = 1'-0" — C / S4.5

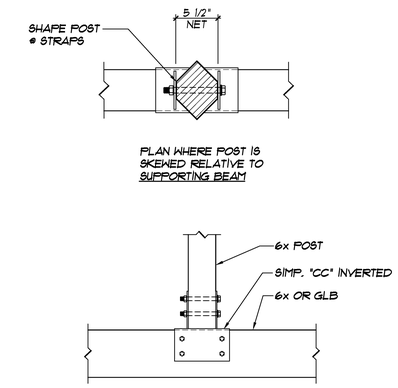

DETAIL — SCALE: 1" = 1'-0" — D / S4.5

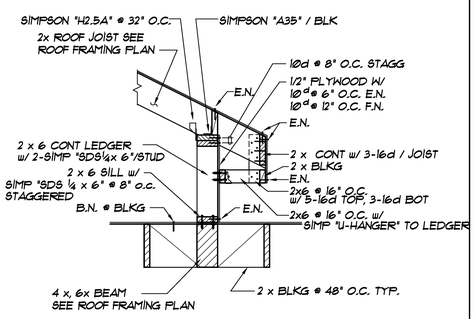

SECTION — SCALE: 1" = 1'-0" — E / S4.5

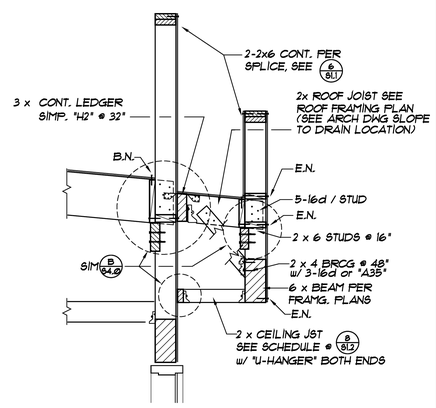

SECTION — SCALE: 1" = 1'-0" — F / S4.5

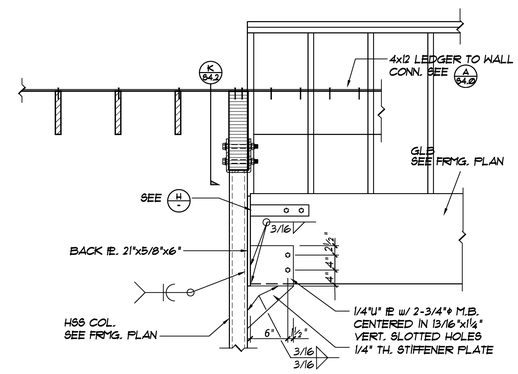

DETAIL — SCALE: 3/4" = 1'-0" — G / S4.5

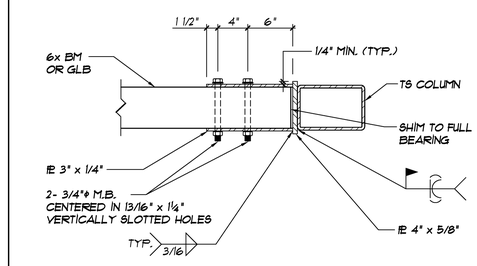

DETAIL — SCALE: 3/4" = 1'-0" — H / S4.5

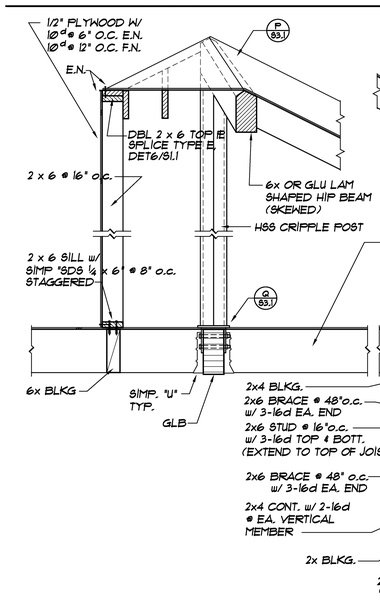

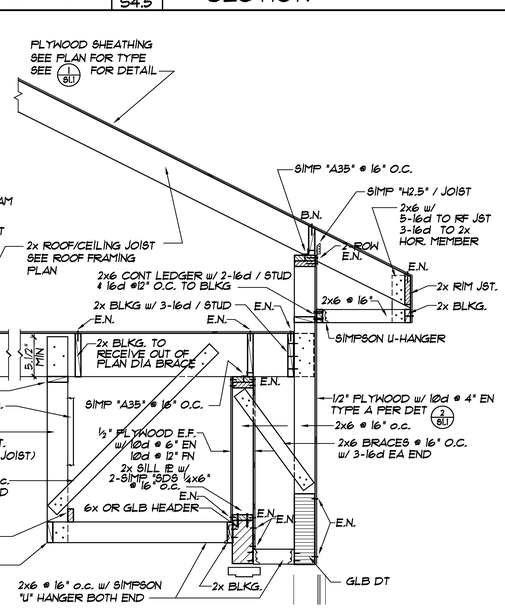

SECTION — SCALE: 3/4" = 1'-0" — J / S4.5

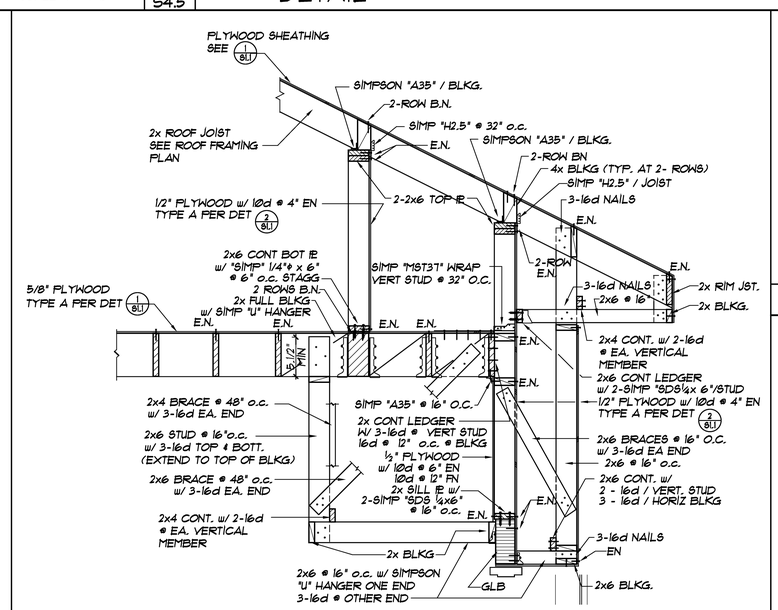

SECTION — SCALE: 3/4" = 1'-0" — M / S4.5

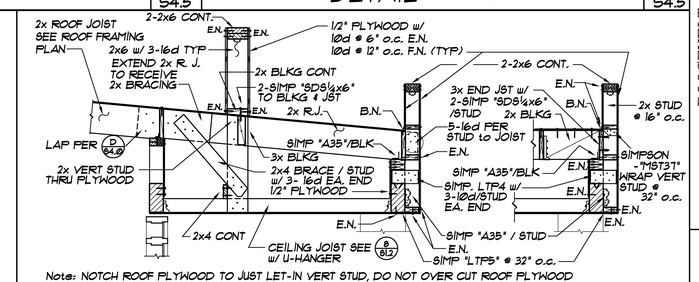

Note: NOTCH ROOF PLYWOOD TO JUST LET-IN VERT STUD, DO NOT OVER CUT ROOF PLYWOOD

SECTION — SCALE: 1/2" = 1'-0" — K / S4.5

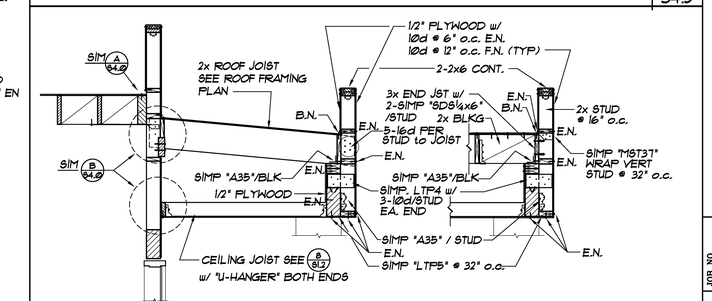

SECTION — SCALE: 1/2" = 1'-0" — L / S4.5

REVISIONS

IDENTIFICATION STAMP
DIV. OF THE STATE ARCHITECT
OFFICE OF PUBLIC SCHOOL CONSTRUCTION
APPL. 04-107199
A/C: ____ F.S. ____ SS. ____
DATE: ____

THOMPSON & ASSOCIATES
STRUCTURAL ENGINEERS
8122 E. WALNUT STREET
PASADENA, CALIFORNIA 91107
PH (626)449-2970
FAX (626)449-4651

P S W C GROUP
ARCHITECTS / PLANNERS
1867 BUSINESS CENTER DR., SUITE 9, SAN BERNARDINO, CA. 92408
909/890-2253 FAX. 909/890-2844

ROOSEVELT II
ELEMENTARY SCHOOL
SAN BERNARDINO CITY UNIFIED SCHOOL DISTRICT
1281 W. 16TH STREET, SAN BERNARDINO, CA.

SECTIONS & DETAILS
SCALE: AS NOTED

JOB NO.
DRAWN BY D.S.E.
DATE

S4.5

RE-BID #F09-02 ROOSEVELT II (HENRY) E.S. NEW CONSTRUCTION BID ISSUANCE SET 12/09/11

Z:\CLIENTS\SAN BERNARDINO SCHOOLS\14-0901 - ALESSANDRO & ROOSEVELT\ACAD\S4-5.dwg 12-07-11-8:39 AM