PENETRATING MEMBERS

ONE METALLIC PIPE, CONDUIT OR TUBING INSTALLED EITHER CONCENTRICALLY OR ECCENTRICALLY WITHIN THE FIRESTOP SYSTEM. THE ANNULAR SPACE BETWEEN PIPE, CONDUIT OR TUBING AND PERIPHERALLY OF OPENING SHALL BE A MIN. OF 0 IN. (POINT) OF CONTACT) TO MAX. 2 IN. PIPE, CONDUIT OR TUBING TO BE RIGIDLY SUPPORTED ON BOTH SIDE OF THE WALL ASSEMBLY. THE FOLLOWING TYPES & SIZES OF METALLIC PIPES, CONDUITS OR TUBING MAY BE USED:

A. STEEL PIPE: NOM 24 IN. DIAM. (OR SMALLER) SCHEDULE 10 (OR HEAVIER) STEEL PIPE.

B. IRON PIPE: NOM 24 IN. DIAM. (OR SMALLER) SERVICE WEIGHT (OR HEAVIER) CAST IRON SOIL PIPE, NOM 12 IN. DIAM. (OR SMALLER) OR CLASS 50 (OR HEAVIER) DUCTILE IRON PRESSURE PIPE.

C. CONDUIT: NOM 6 IN. DIAM. (OR SMALLER) STEEL CONDUIT OR NOM 4 IN. DIAM. (OR SMALLER) STEEL ELECTRICAL METALLIC TUBING.

D. COPPER TUBING: NOM 6 IN. DIAM. (OR SMALLER) TYPE L (OR HEAVIER) COPPER TUBING.

E. COPPER PIPE: NOM 6 IN. DIAM. (OR SMALLER) REGULAR (OR HEAVIER) COPPER PIPE.

F. THROUGH PENETRATING PRODUCT: FLEXIBLE METAL PIPING, THE FOLLOWING TYPES OF STEEL FLEXIBLE METAL GAS PIPING MAY BE USED:

1. NOM 2 IN. DIAM (OR SMALLER) STEEL FLEXIBLE METAL GAS PIPING. PLASTIC COVERING ON PIPING MAY OR MAY NOT BE REMOVED ON BOTH SIDES OF FLOOR OR WALL ASSEMBLY

FILL VOID OR CAVITY MATERIAL - CAULK-MIN. 5/8, 1-1/4", 1-7/8" AND 2-1/2" THICKNESS OF CAULK FOR 1, 2, 3 AND 4 HR. RATED ASSEMBLIES, RESPECTIVELY, APPLIED WITHIN ANNULUS, FLUSH WITH BOTH SURFACES OF WALL. MIN 1/4 IN. DIAM BEAD OF CAULK APPLIED TO GYPSUM BOARD/PENETRANT INTERFACE AT POINT CONTACT LOCATION ON BOTH SIDES OF WALL. THE HOURLY RATING OF THE FIRESTOP SYSTEM IS DEPENDENT UPON THE HOURLY FIRE RATING OF THE WALL ASSEMBLY IN WHICH IT IS INSTALLED.

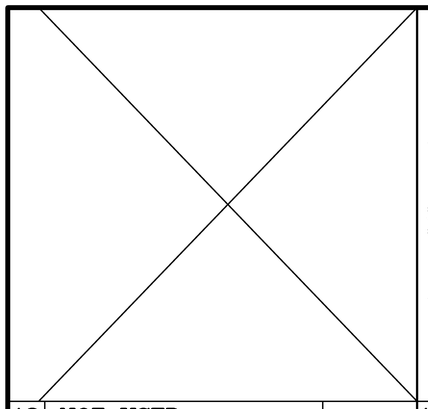

18 NOT USED

14 FRAMED COLUMN 1 1/2"=1'-0"

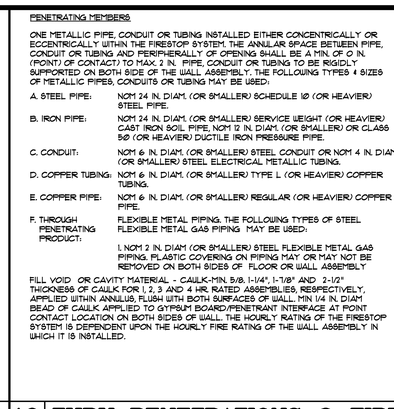

10 THRU PENETRATIONS @ FIREWALLS N.T.S.

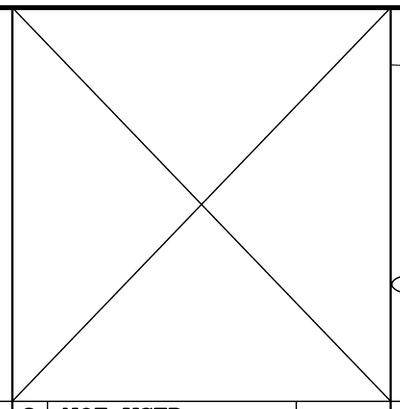

2 NOT USED

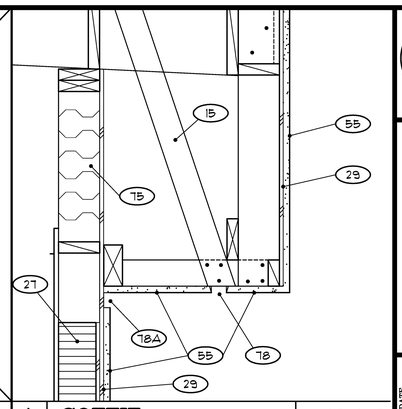

A SOFFIT 1 1/2"=1'-0"

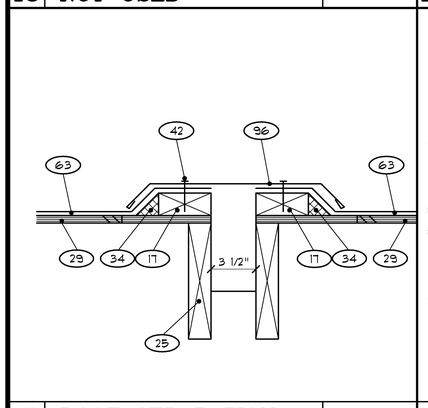

19 ROOF SEPARATION 3"=1'-0"

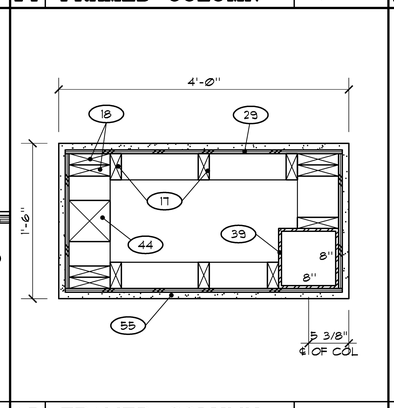

15 FRAMED COLUMN 1 1/2"=1'-0"

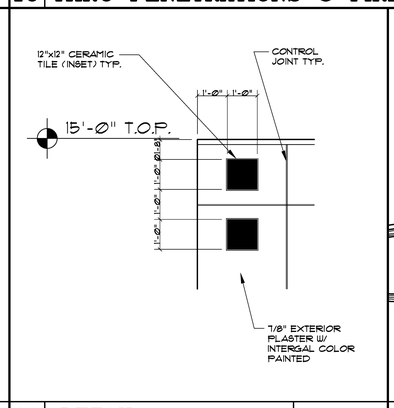

11 DETAIL N.T.S.

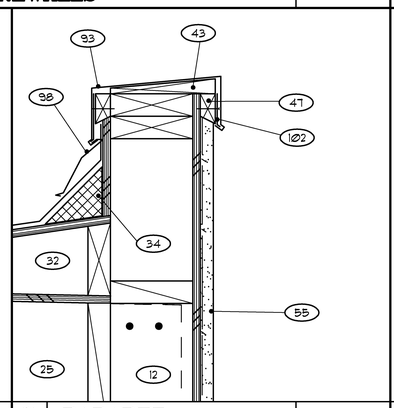

7 PARAPET 1 1/2"=1'-0"

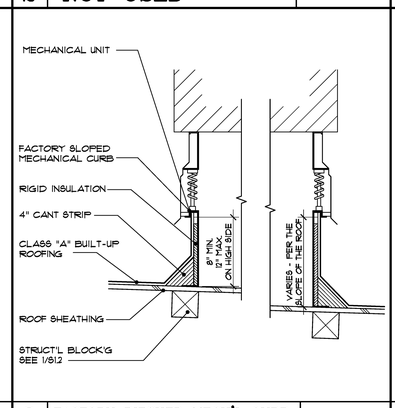

3 FACTORY PITCHED MECH'L CURB 1 1/2"=1'-0"

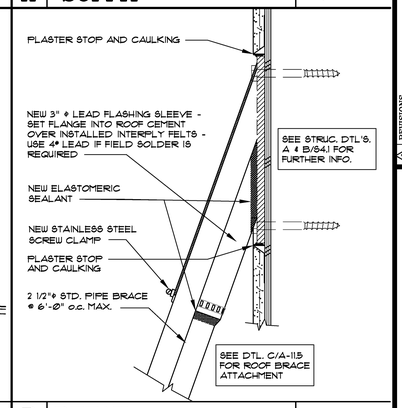

B DETAIL N.T.S.

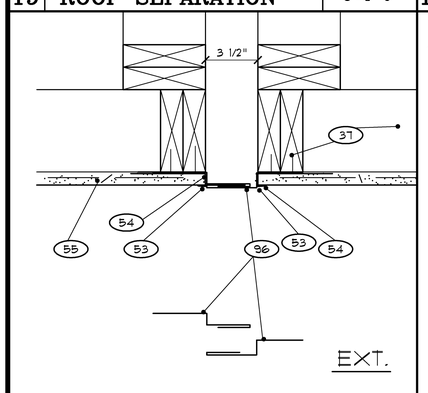

20 SOFFIT & EAVE SEP. @ WALK 3"=1'-0"

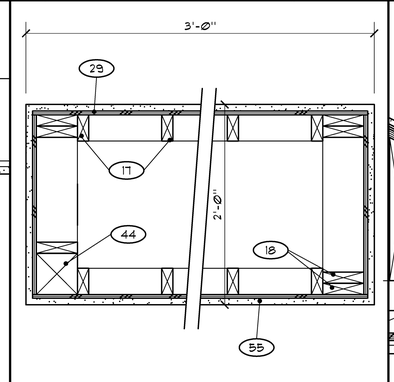

16 FRAMED COLUMN 1 1/2"=1'-0"

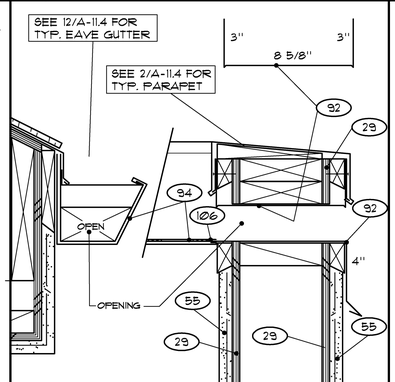

12 THRU-WALL GUTTER 3"=1'-0"

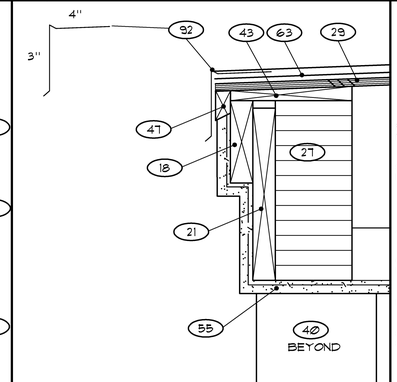

8 EAVE @ WALK 3"=1'-0"

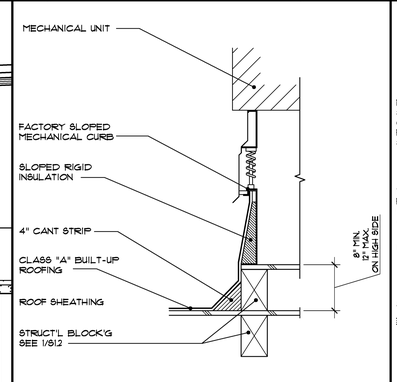

4 MECHANICAL CURB 1 1/2"=1'-0"

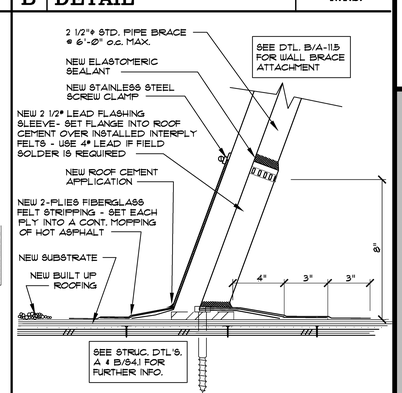

C DETAIL N.T.S.

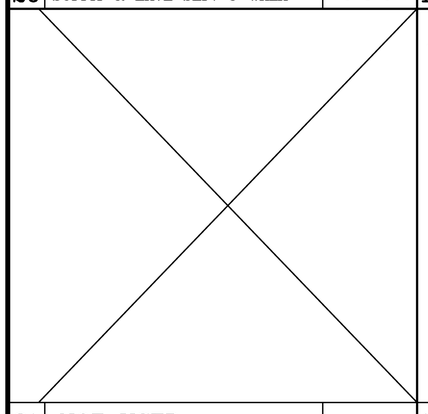

21 NOT USED

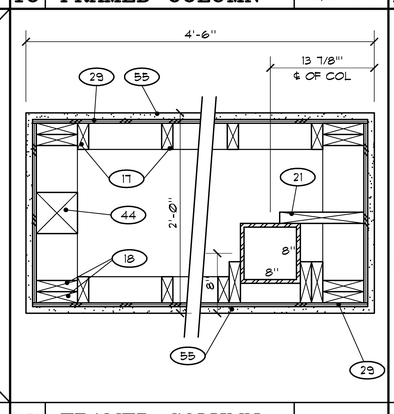

17 FRAMED COLUMN 1 1/2"=1'-0"

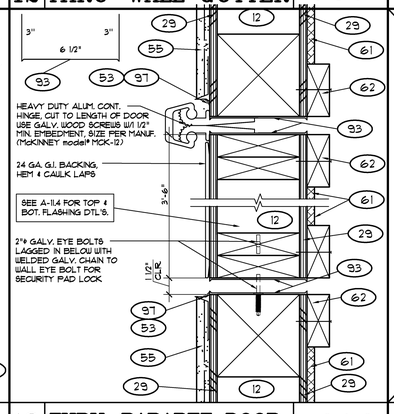

13 THRU-PARAPET DOOR 3"=1'-0"

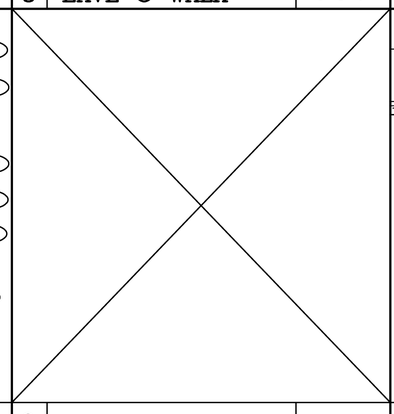

9 NOT USED

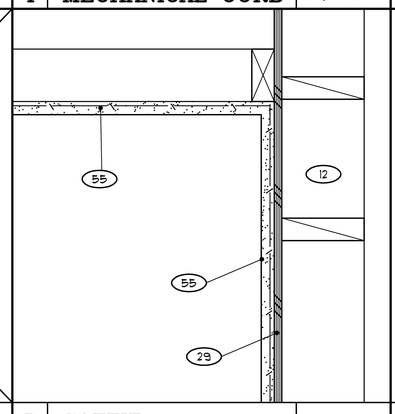

5 SOFFIT 1 1/2"=1'-0"

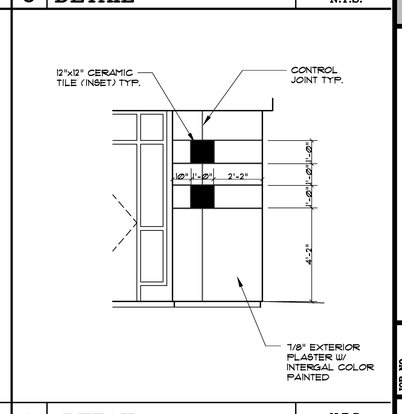

1 DETAIL N.T.S.

LICENSED ARCHITECT JAMES M. SHANNON C19096 RENEWAL 02/28/ STATE OF CALIFORNIA

DATE	REVISIONS

P S W C GROUP
ARCHITECTS / PLANNERS
1867 BUSINESS CENTER DR., SUITE 3, SAN BERNARDINO, CA. 92408
909/890-2223 FAX. 909/890-2844

ROOSEVELT II ELEMENTARY SCHOOL
SAN BERNARDINO CITY UNIFIED SCHOOL DISTRICT
1261 W. 16TH STREET, SAN BERNARDINO, CA.

DETAILS

SCALE: AS SHOWN

JOB NO. F520
DRAWN BY
DATE 6/7/2011

A-11.5

RE-BID #F09-02 ROOSEVELT II (HENRY) E.S. NEW CONSTRUCTION BID ISSUANCE SET 12/09/11