GENERAL NOTE

A - ALL PLATES TO COLUMNS SHALL BE CONNECTED WITH 2 - 1" Ø X 1 ¼" HEX HEAD BOLTS A-307 W/ WASHERS.

B - ALL PLATES TO BMS. SHALL BE CONNECTED WITH 2 - ¾" Ø X 1 ¼" HEX HEAD BOLTS A-307 BOLTS W/ WASHERS.

C - SLOTTED HOLES ALLOWED ON ALL BEAMS AT CONNECTION TO COLUMN PLATES ONLY. A-325-SC BOLTS REQUIRED AT SLOTTED HOLE CONNECTIONS ONLY.

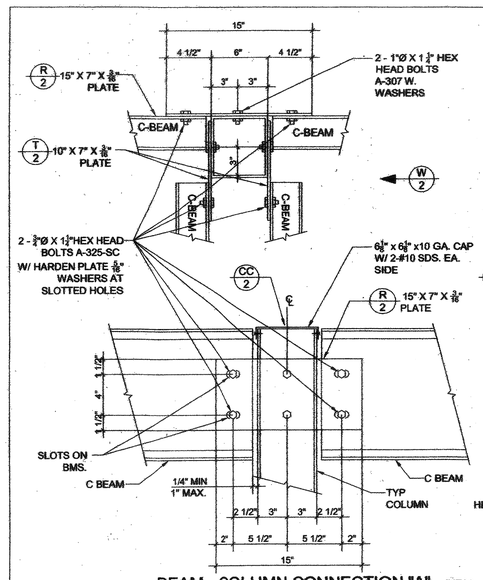

BEAM - COLUMN CONNECTION "A" (NTS.)

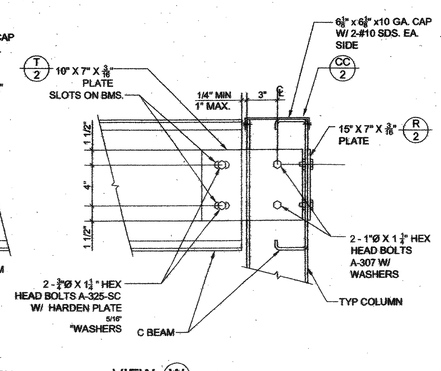

VIEW W (NTS.)

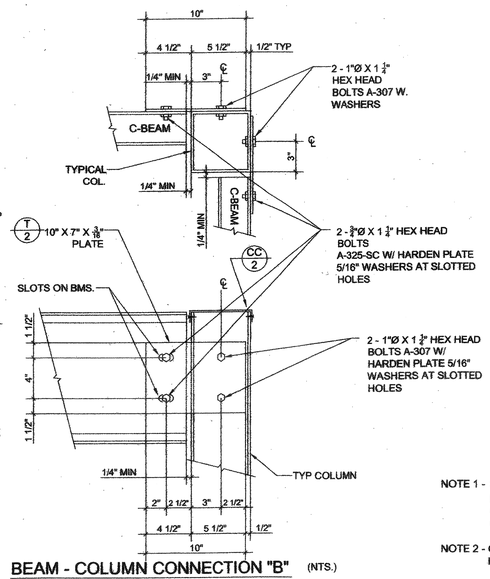

BEAM - COLUMN CONNECTION "B" (NTS.)

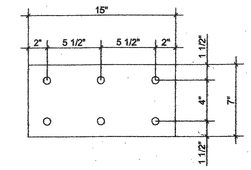

PLATE DETAIL R NTS

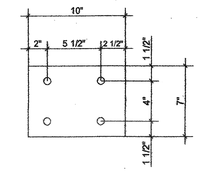

PLATE DETAIL T NTS

NOTE 1 - SLOTTED HOLE TO BE 13/16" X 1 ¾" ON BEAMS MIN. END DISTANCE AT SLOTTED HOLE TO BE 1 ¼" COMPLY WITH SEC. 2231A.6 FOR INSPECTION OF HIGH STRENGTH BOLT INSTALLATION.

NOTE 2 - COMPLY WITH 2231A.6 FOR INSPECTION OF HIGH STRENGTH BOLT INSTALLATIONS.

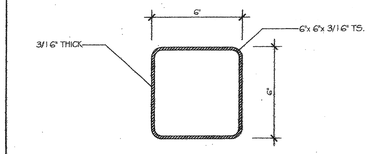

ASTM A-500 GRADE "C"
Fy= 46,000 PSI

STRUCTURAL PROPERTIES							
MEMBER	A	Sx	Sy	Ix	Iy	Rx	Ry
COL. 6"x6"x3/16"	4.27	7.93	7.93	23.8	23.8	2.36	2.36

SCALE: 3"= 1'-0"

TUBE STEEL COLUMN 1

13C 12 x 3.25 SECTIONAL PROPETIES NATIONAL CARPORTS INDUSTRIES AISI 1996 COLD FORMED STEEL DESIGN MANUAL											
GROSS SECTION PROPERTIES											
GAGE in⁴	DEPTH (in)	Fy (ksi)	Wt. (plf)	Area in²	Ix in⁴	Sx in³	rx (in)	Iy in⁴	Sy lip in³	ry (in)	
12	13	50	6.93	2.168	51.429	7.912	4.871	2.774	1.114	1.125	
13C 12 x 3.25 SECTIONAL PROPETIES NATIONAL CARPORTS INDUSTRIES AISI 1996 COLD FORMED STEEL DESIGN MANUAL											
EFFECTIVE SECTION PROPERTIES											
GAGE in⁴	DEPTH (in)	Fy (ksi)	Wt. (plf)	Area in²	Ix in⁴	Sx in³	rx (in)	Iy in⁴	Sy lip in³	ry (in)	
12	13	50	6.93	1.447	50.134	7.593	4.871	2.774	1.114	1.125	

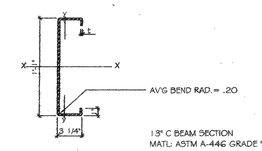

13" C BEAM SECTION
MATL: ASTM A-446 GRADE "D" - Fy= 50 KSI

SCALE: 1 1/2" = 1'-0"

BEAM DETAIL 2

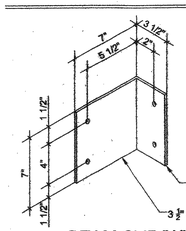

BEAM CLIP "A"

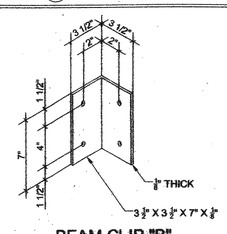

BEAM CLIP "B"

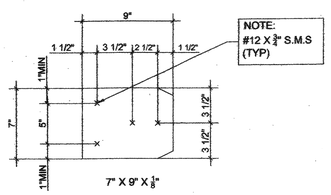

BASE PLATE "A"

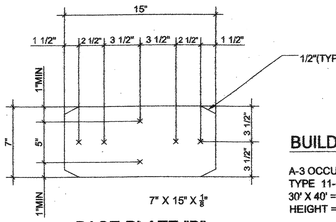

BASE PLATE "B"

BUILDING DATA

A-3 OCCUPANCY
TYPE 11-N CONSTRUCTION
30' X 40' = 1200 SQ. FT.
HEIGHT = 12'-0"

ROOF COVERING SHALL BE CLASS "A"

THIS BUILDING SHALL COMPLY WITH CHAPTERS 3, 5 & 6 OF C.B.C.

PC IDENTIFICATION STAMP DIV OF THE STATE ARCHITECT
APP03- 106802
AC FLS SS
DATE APR 16 2003

CBC 2001

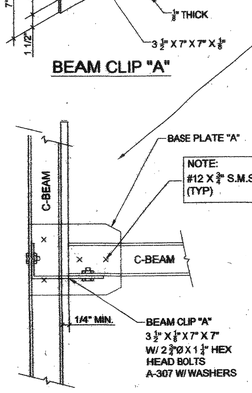

BEAM TO BEAM CONN "C"

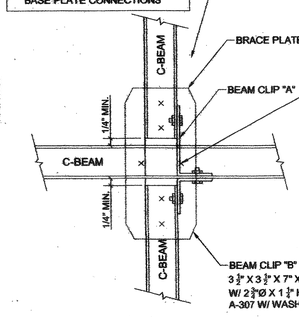

BEAM TO BEAM CONN "D"

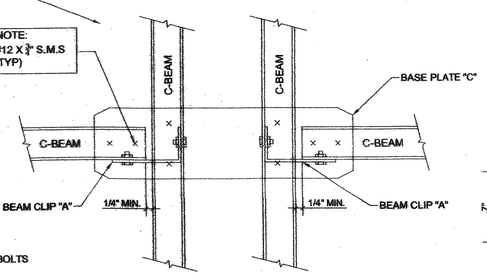

BEAM TO BEAM CONN "E"

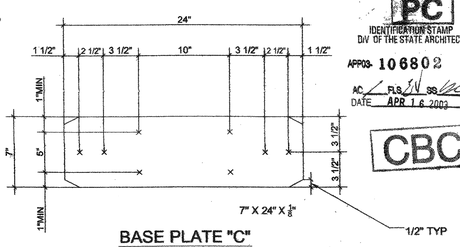

BASE PLATE "C"

ROOF DECK PROFILE SECTIONAL PROPERTIES NATIONAL CARPORTS INDUSTRIES FULLY BRACE STRENGTH - 1996 AISI SPECIFICATION SUPPLEMENT 1 (ASD)						
POSITIVE MOMENT - X AXIS						
GAGE	Fy (ksi)	Wt. (k/ft)	Maxo k-in	Ixe in⁴	Sxe (t) in³	Sxe (b) in³
24	50	0.0022091	4.133	0.264	0.1380	0.7514
ROOF DECK PROFILE SECTIONAL PROPERTIES NATIONAL CARPORTS INDUSTRIES FULLY BRACE STRENGTH - 1996 AISI SPECIFICATION SUPPLEMENT 1 (ASD)						
NEGATIVE MOMENT - X AXIS						
GAGE	Fy (ksi)	Wt. (k/ft)	Maxo k-in	Ixe in⁴	Sxe (t) in³	Sxe (b) in³
24	50	0.0022091	4.125	0.187	0.1991	0.1408

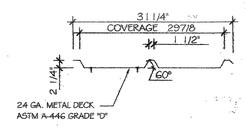

NOT TO SCALE

METAL DECK DETAIL 3

STRUCTURAL ENGINEER
EDMUND C. FOERSTEL
915 "A" AVENIDA AMANECER
SAN CLEMENTE, CA 92672
PH 949 492-5861
FAX 949 498-3020

NATIONAL CARPORTS, IND.
P.O. BOX 2323
SHERMAN, TX. 75091

GREG. JONES
REGIONAL MANAGER
680 HUNTER PLACE
RENO, NEVADA 89509
PH 775-787-8845
FX 775-787-8846

JOB LOCATION

CUSTOMER

IDENTIFICATION STAMP DIV. OF THE STATE ARCHITECT OFFICE OF REGULATORY SERVICES
04 107199
AC FLS SS
DATE DEC 21 2007

DRAWN BY
SCALE
DATE
APPROVED BY

SCHOOL SHADE STRUCTURE
STATE OF CALIFORNIA STD. PC 03-106802
SHEET 2 OF SHEETS

RE-BID #F09-02 ROOSEVELT II (HENRY) E.S. NEW CONSTRUCTION BID ISSUANCE SET 12/09/11