SEE SHT. A-7.1
FOR KEYNOTES

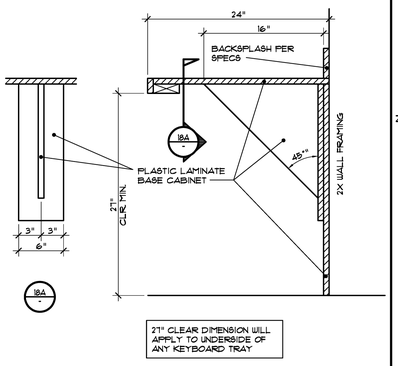

27" CLEAR DIMENSION WILL APPLY TO UNDERSIDE OF ANY KEYBOARD TRAY

18	WORKSTATION	1-1/2"=1'-0"

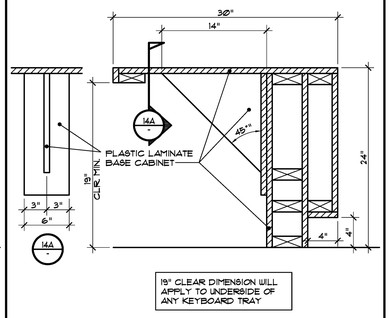

19" CLEAR DIMENSION WILL APPLY TO UNDERSIDE OF ANY KEYBOARD TRAY

14	WORKSTATION	1-1/2"=1'-0"

10	NOT USED	-

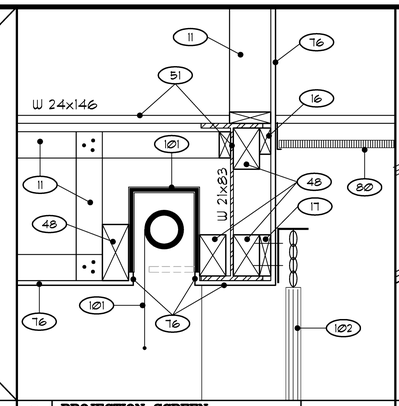

6	PROJECTION SCREEN & STAGE DRAPES	1 1/2"=1'-0"

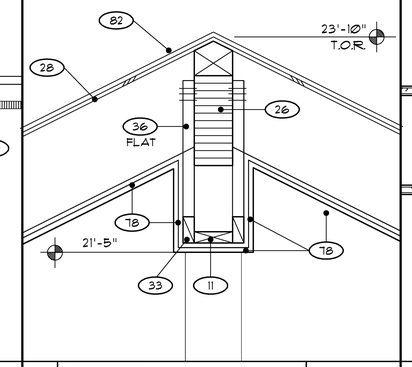

2	RIDGE	1 1/2"=1'-0"

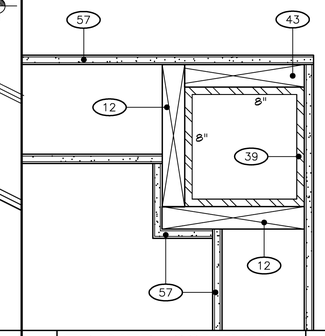

A	FRAMED COLUMN	3"=1'-0"

19	NOT USED	-

15	NOT USED	-

11	NOT USED	-

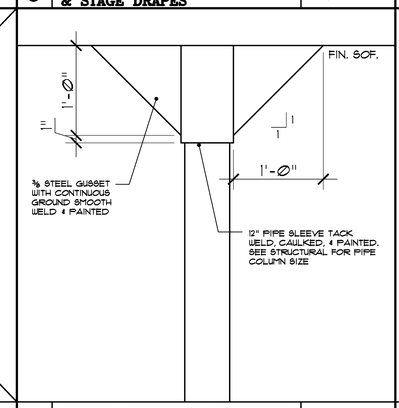

7	PIPE SLEEVE GUSSET	1 1/2"=1'-0"

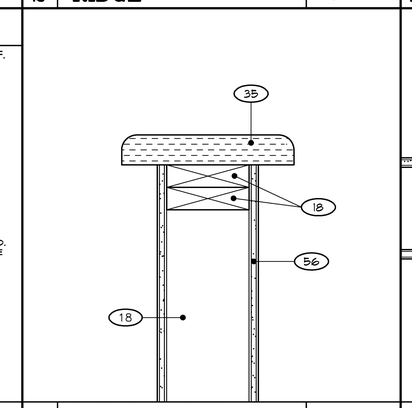

3	OAK CAP DETAIL	3"=1'-0"

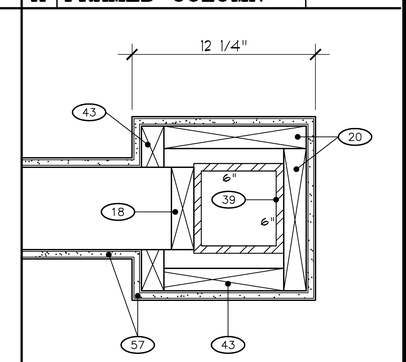

B	FRAMED COLUMN	3"=1'-0"

20	NOT USED	-

16	NOT USED	-

12	NOT USED	-

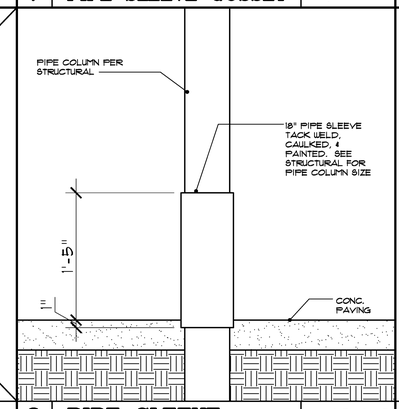

8	PIPE SLEEVE	1 1/2"=1'-0"

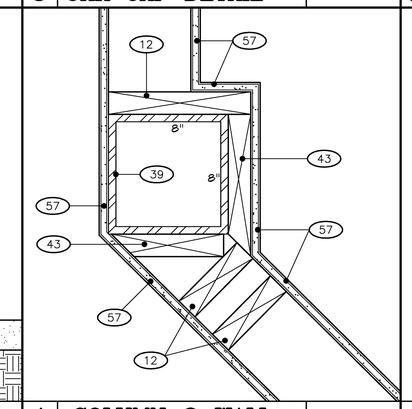

4	COLUMN @ WALL	3"=1'-0"

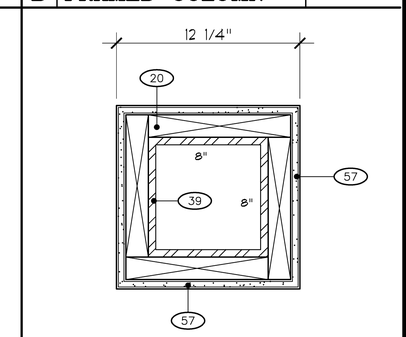

C	FRAMED COLUMN	3"=1'-0"

21	NOT USED	-

17	NOT USED	-

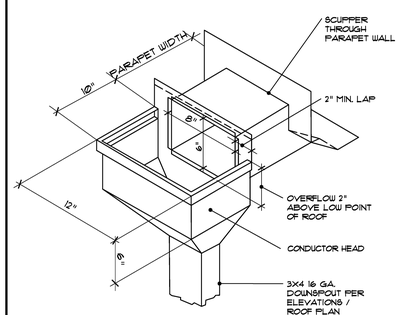

CONDUCTOR HEAD ELEVATION

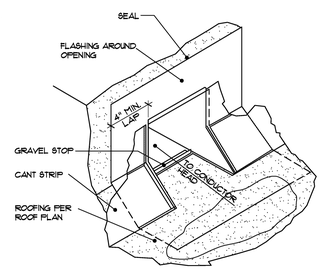

SCUPPER ELEVATION

13	SCUPPER / CONDUCTOR HEAD	N.T.S.

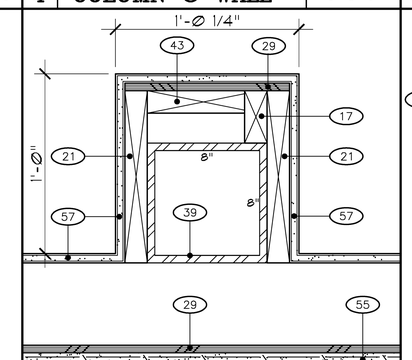

5	COLUMN @ WALL	3"=1'-0"

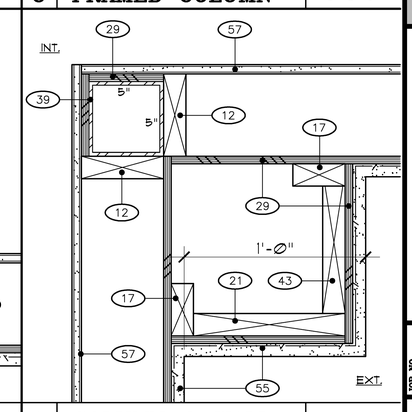

1	COLUMN @ WALL	3"=1'-0"

LICENSED ARCHITECT
MARC M. STRAUSS
C19098
RENEWAL 02/28/
STATE OF CALIFORNIA

DATE	REVISIONS
	1

P S W C GROUP
ARCHITECTS / PLANNERS
1867 BUSINESS CENTER DR., SUITE 3, SAN BERNARDINO, CA. 92408
909/890-2833 FAX. 909/890-2844

ROOSEVELT II
ELEMENTARY SCHOOL
SAN BERNARDINO CITY UNIFIED SCHOOL DISTRICT
1261 W. 16TH STREET, SAN BERNARDINO, CA.

DETAILS

SCALE: AS SHOWN

JOB NO. F9S20
DRAWN BY
DATE 5/7/2011

A-11.6

RE-BID #F09-02 ROOSEVELT II (HENRY) E.S. NEW CONSTRUCTION BID ISSUANCE SET 12/09/11