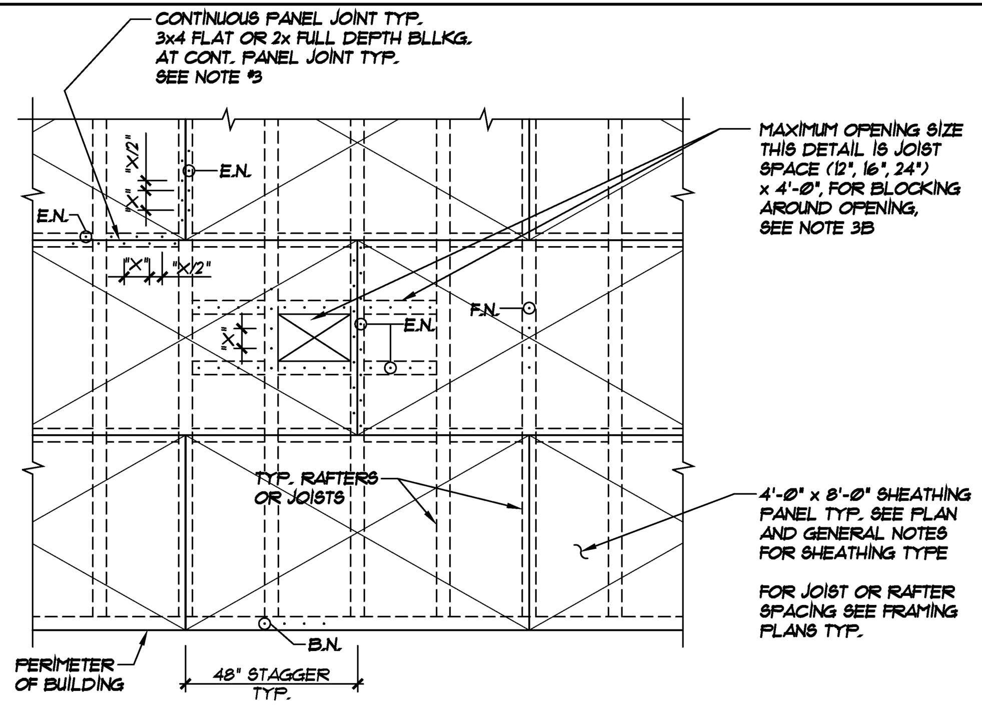

PLYWOOD PANEL SCHEDULE

TYPE	APA RATED PLYWOOD			PLYWOOD NAILING			NOMINAL WIDTH OF FRAMING MEMBER	SHEAR CAPACITY (lb / ft.)
	THICKNESS	GRADE	SPAN RATING	B.N.	E.N.	FIELD		
A	5/8"	STRUCT. I	32/16	10d @ 6"	10d @ 6"	10d @ 12"	2x	320
B	5/8"	STRUCT. I	32/16	10d @ 4"	10d @ 6"	10d @ 12"	2x	425
C	5/8"	STRUCT. I	32/16	10d @ 2½"	10d @ 4"	10d @ 12"	3x	720

NOTES:

1. NAILING:

A. B.N. = BOUNDARY NAILING OR CONTINUOUS PANEL JOINT NAILING
E.N. = EDGE OF PANEL NAILING
F.N. = FIELD NAILING
B. "X" REPRESENTS NAIL SPACING, FOR NAIL SIZE AND SPACING SEE FRAMING PLANS AND PLYWOOD PANEL SCHEDULE.
C. 1/2" SHALL BE THE MINIMUM EDGE DISTANCE FOR NAILING OF SHEATHING.
D. FRAMING AND BLOCKING AT ADJOINING PANEL EDGES SHALL BE 3 INCH NOMINAL OR WIDER WHERE NAILS ARE SPACED AT 3 INCHES OR LESS.
E. ALL NAILS SHALL BE COMMON WIRE NAILS. SINKER OR BOX NAILS ARE NOT ALLOWED. 10d NAIL = 9 GA. x 3"

2. SHEATHING:

A. SEE FRAMING PLANS AND GENERAL NOTES FOR SHEATHING TYPE (EXAMPLE: PLYWOOD, APA RATED SHEATHING)
B. USE 4'-0" x 8'-0" MINIMUM SHEETS WHENEVER POSSIBLE AND STAGGER SHEATHING AS SHOWN ON FRAMING PLANS.
C. MINIMUM DIMENSION OF ANY PIECE OF SHEATHING SHALL BE 2'-0" x 4'-0".
D. PLYWOOD JOINTS SHALL OCCUR IN THE CENTER OF FRAMING MEMBERS OR BLOCKING.
E. PLYWOOD SHALL HAVE FACE GRAIN LAID PERPENDICULAR TO SUPPORTS.

3. BLOCKING:

A. PLYWOOD EDGES SHALL BE BLOCKED AS FOLLOWS:
I) SAWN LUMBER - PROVIDE 2x FULL DEPTH BLOCKING AT 8'-0" o.c. MAXIMUM. 3x4 FLAT BLOCKING AT ALL OTHER PANEL EDGE.
II) SOLID WEB BUILT UP JOIST - PROVIDE 2x4 FLAT BLOCKING AT ALL PANEL EDGES.
III) USE Z CLIPS TO ATTACH FLAT BLOCKING TO JOIST.
B. BLOCKING AT OPENINGS:
I) SAWN LUMBER - BLOCKING SAME SIZE AND DEPTH AS JOIST OR RAFTER WITH "A35" EACH SIDE, EACH END TYP.
II) SOLID WEB BUILT UP JOIST - 2x8 ATTACHED TO WEB STIFFENER ON JOIST WITH "A35" EACH SIDE, EACH END TYP.
C. FOR ADDITIONAL BLOCKING REQUIREMENTS AT LARGER OPENINGS, SEE TYPICAL OPENING PLAN DETAIL.

TYPICAL ROOF SHEATHING LAYOUT
1 / S1.1

FRAMING SCHEDULE

CLEAR SPAN OF OPNING	HEADER SIZE	NO. & SIZE OF J.S.		NO. & SIZE OF K.S.		NO. OF WINDOW SILL PLATES
	NON-BRG. WALLS	BRG. WALLS	NON-BRG. WALLS	BRG. WALLS	NON-BRG. WALLS	
UP TO 4'-0"	6 x 4 #	1- 2x	1- 2x	2- 2x	1- 2x	1- 2x
4'-1" TO 6'-0"	6 x 6 #	1- 2x	1- 2x	2- 2x	1- 2x	1- 2x
6'-1" TO 8'-0"	6 x 8 #	2- 2x	2- 2x	1- 4x	2- 2x	2- 2x
8'-1" TO 10'-0"	6 x 10 #	2- 2x	2- 2x	1- 4x	2- 2x	2- 2x
10'-1" TO 12'-0"	6 x 12 #	2- 2x	2- 2x	1- 6x	2- 2x	1- 2x & 1- 4x

NOTES:
1. 6x HEADER SIZE SHOWN IS FOR 2 x 6 STUD WALLS. REVISE TO 4x FOR 2 x 4 STUD WALLS AND 8x FOR 2 x 8 STUD WALLS. HEADER SIZES ARE TYPICAL U.O.N. ON PLAN.
2. DETAILS AND MEMBER SIZES ARE TYPICAL UNLESS OTHERWISE NOTED OR DETAILED.
3. NOTES AND MEMBER SIZES SHOWN ON FRAMING PLANS SHALL TAKE PRECEDENCE OVER SCHEDULE.
4. FOR HEADER SIZES AT BEARING WALLS, SEE FRAMING PLANS.
5. "CLEAR SPAN" IN THE TABLE ABOVE IS THE CLEAR DISTANCE BETWEEN KING STUDS.

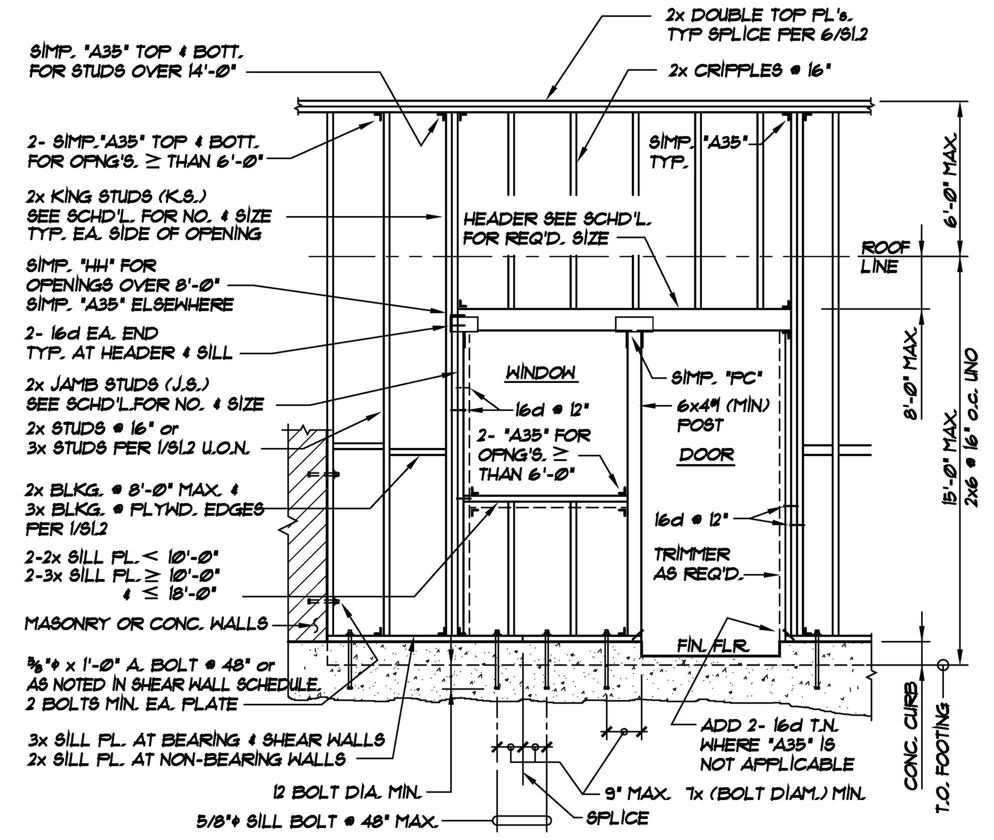

FRAMING AT EXTERIOR SINGLE OPENING
SCALE: 3/8"=1'-0" 3 / S1.1

FRAMING SCHEDULE

CLEAR SPAN OF OPNING	HEADER SIZE	NO. OF J.S.		NO. OF K.S.	NO. OF SILL PL'S.
	NON-BRG. WALLS	BRG. WALLS	NON-BRG. WALLS		
UP TO 4'-0"	6 x 4 #	2	1	1	1
4'-1" TO 6'-0"	6 x 6 #	2	1	1	1
6'-1" TO 8'-0"	6 x 8 #	2	2	2	1
8'-1" TO 10'-0"	6 x 10 #	2	2	2	1
10'-1" TO 12'-0"	6 x 12 #	2	2	2	2

NOTES:
1. 6x HEADER SIZE SHOWN IS FOR 2 x 6 STUD WALLS. REVISE TO 4x FOR 2 x 4 STUD WALLS AND 8x FOR 2 x 8 STUD WALLS. USE "A35" AT 2 x 6 STUDS.
2. WHERE SHEAR PANEL OCCURS SEE TYPICAL SHEAR WALL OPENING DETAIL
3. DETAILS AND MEMBER SIZES ARE TYPICAL UNLESS OTHERWISE NOTED OR DETAILED
4. NOTES AND MEMBER SIZES SHOWN ON FRAMING PLANS SHALL TAKE PRECEDENCE OVER SCHEDULE.

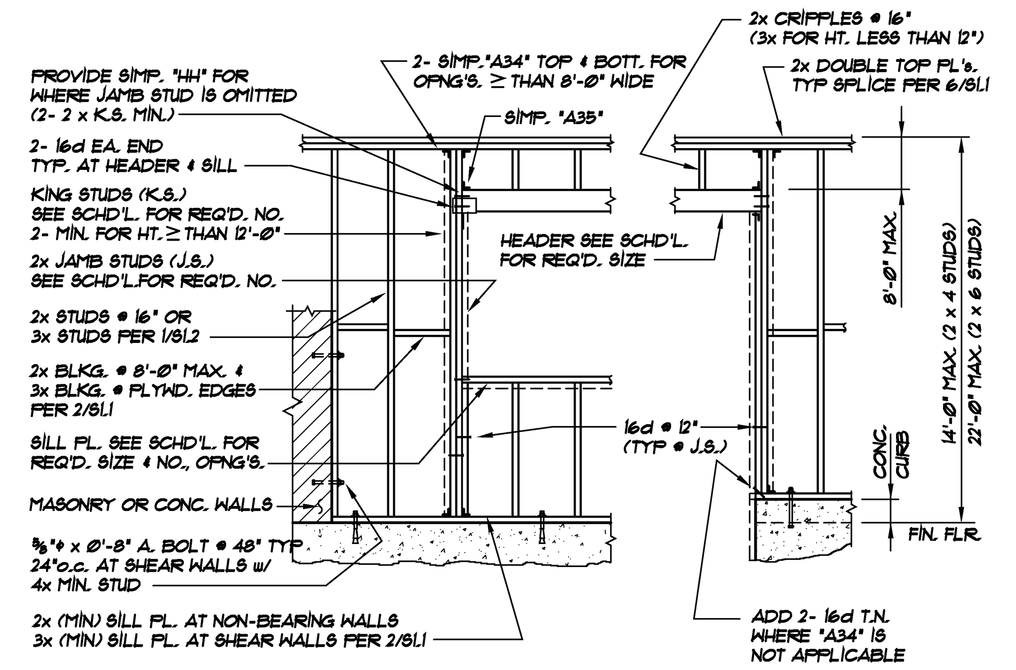

FRAMING AT INTERIOR SINGLE OPENING
SCALE: 3/8"=1'-0" 4 / S1.1

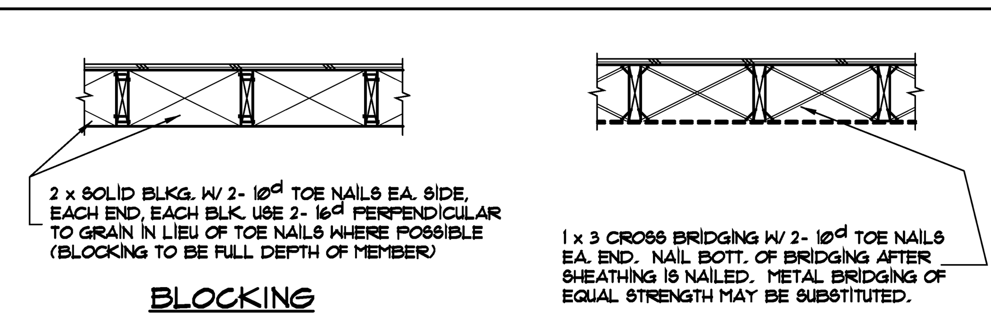

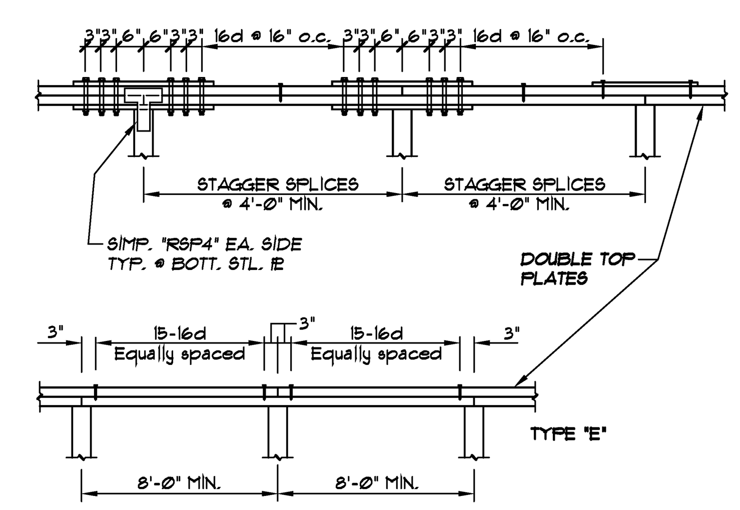

TYPE "A" - MST 60 w/ 56- 16d
TYPE "B" - 3/16" x 3" PL ONE SIDE w/ 6- ¾"ø BOLTS
TYPE "C" - 3/16" x 3" PL's TOP & BOTT. w/ 4- ¾"ø BOLTS
TYPE "D" - 3/16" x 3" PL's TOP & BOTT. w/ 6- ¾"ø BOLTS
TYPE "E" - 15- 16d / 15- 16d

TYPICAL U.O.N. ON PLANS OR SECTIONS

NOTES:
SPLICE PLATES OVER ¢ POST, STUD OR MULLION ONLY.
PROVIDE SIMPSON "RSPA" EACH SIDE WHERE BOTTOM PL IS SPLICED.

TYPICAL TOP PLATES SPLICE DETAILS
6 / S1.1

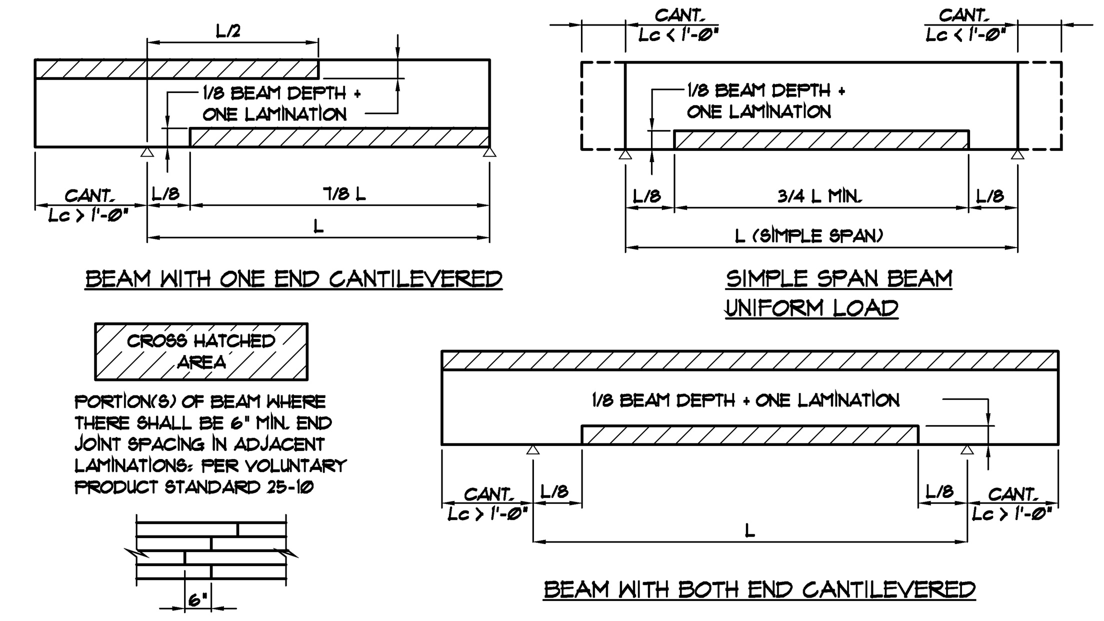

SPACING OF END JOINTS IN GLUED LAMINATED BEAMS
7 / S1.1

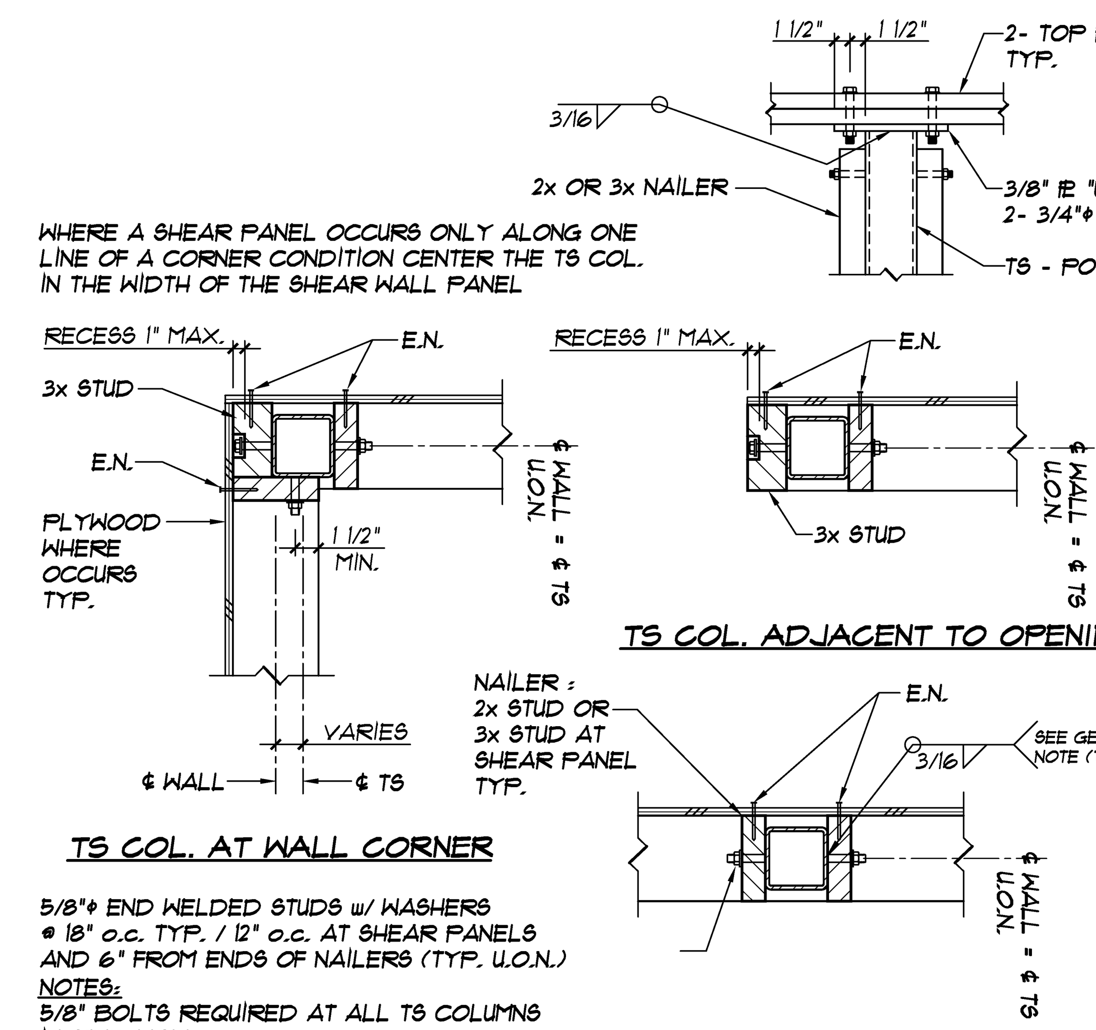

5/8"ø END WELDED STUDS w/ WASHERS @ 18" o.c. TYP. / 12" o.c. AT SHEAR PANELS AND 6" FROM ENDS OF NAILERS (TYP. U.O.N.)
NOTES:
5/8" BOLTS REQUIRED AT ALL TS COLUMNS IN STUD WALL

NOTES:
1. FOR SHEAR PANEL LOCATIONS SEE FOUNDATION PLAN
2. BOLT HOLES DIMENSIONS IN THE WOOD NAILERS SHALL BE LIMITED TO NOT GREATER THAN 1/16" LARGER THAN THE DIAMETER OF THE END WELDED STUDS.

TYPICAL ATTACHMENT OF WOOD NAILERS TO TUBE STEEL POSTS
8 / S1.1

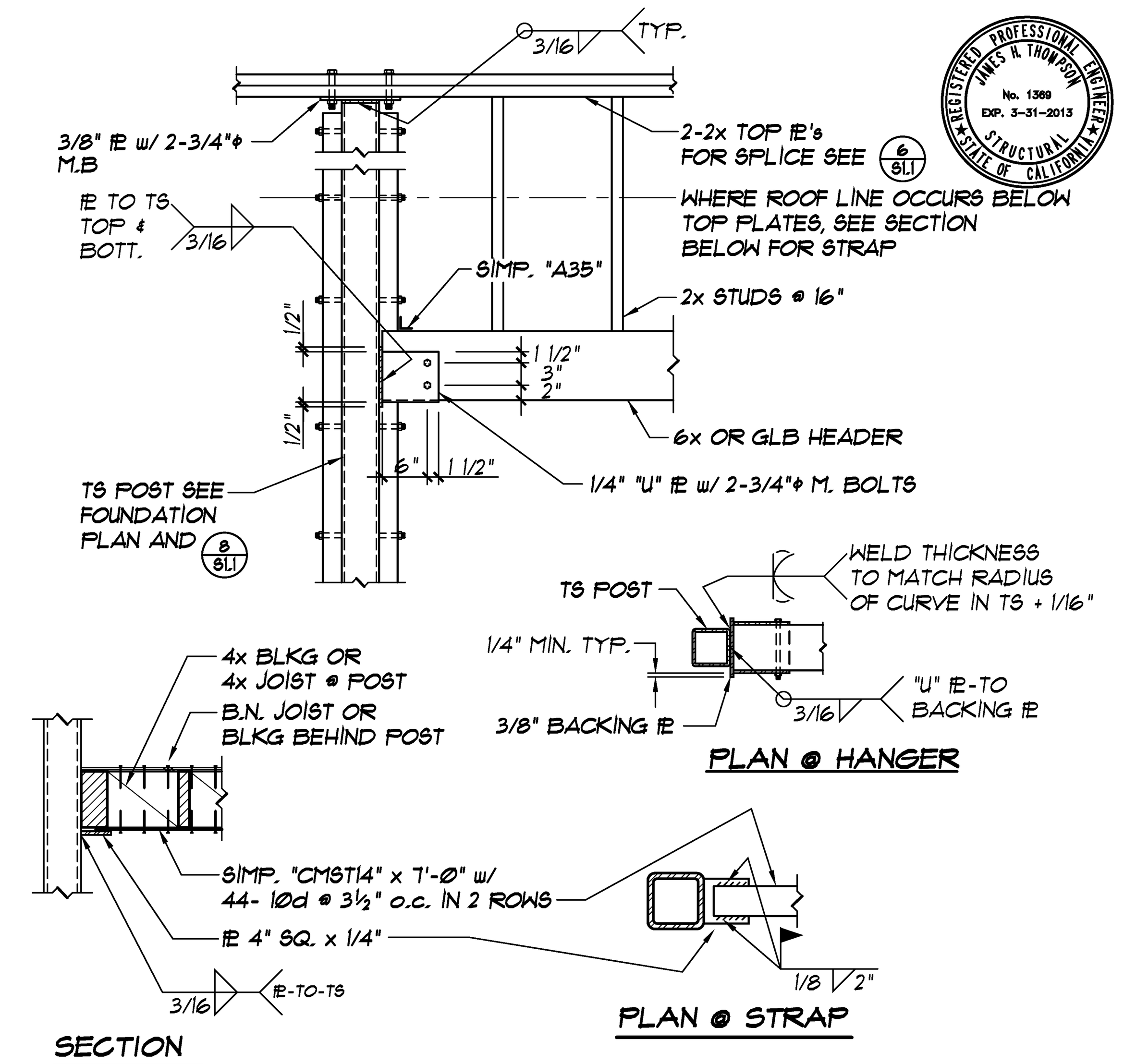

WOOD HEADER TO TS POST CONNECTION
10 / S1.1

NOTE:
PROVIDE BLOCKING OR BRIDGING AT 8'-0" (MAX.) FOR ROOF JOISTS DEEPER THAN 8" AND WHERE SHOWN.

TYPICAL BRIDGING DETAIL
11 / S1.1

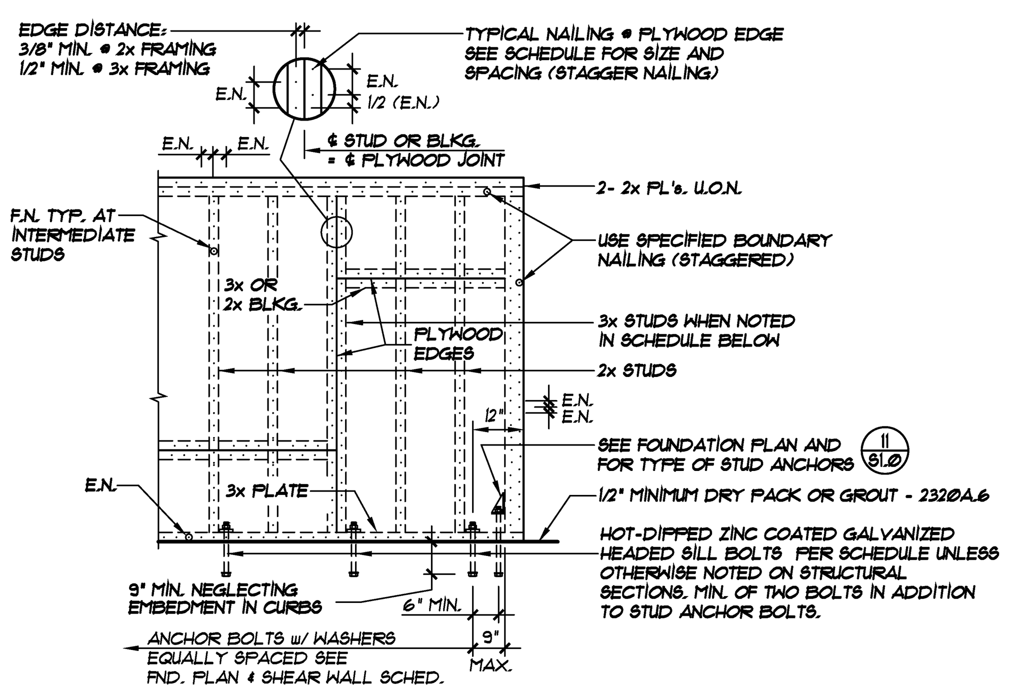

SHEAR WALL SCHEDULE

MARK	APA RATED PLYWOOD		PANEL NAILING		3x SILL PLATE w/ ANCHOR BOLT AND 2" x 2" x 3/16" PL WASHERS	MIN. STUD AND BLKG. SIZE AT ADJOINING PANEL EDGES	SHEAR CAPACITY (lb / ft.)
	THICK	GRADE	E.N.	F.N.			
A / E A F	1/2"	STRUCT. I	10d @ 4" o.c.	10d @ 12" o.c.	5/8"ø @ 16" o.c. 3/4"ø @ 16" o.c.	3x 3x	510 1020
B / E B F	1/2"	STRUCT. I	10d @ 3" o.c.	10d @ 12" o.c.	5/8"ø @ 16" o.c. 3/4"ø @ 16" o.c.	3x 3x	665 1200
C	1/2"	STRUCT. I	10d @ 2" o.c.	10d @ 12" o.c.	5/8"ø @ 16" o.c.	3x	870

NOTES:

A. STRUCTURAL SHEATHING
1. ALL SHEATHING SHALL BE APA RATED 4 PLY OR 5 PLY PLYWOOD, AND GRADE MARKED.
2. USE 4'-0" x 8'-0" MINIMUM SIZE SHEATHING WHENEVER POSSIBLE AND STAGGER ADJACENT HORIZONTAL JOINTS AS SHOWN.
3. INDIVIDUAL PIECES OF PLYWOOD SHALL NOT BE NARROWER THAN A 2:1 RATIO OF LONG DIMENSION TO SHORT DIMENSION.
4. THE DIMENSION OF ANY PIECE OF SHEATHING SHALL NOT BE LESS THAN 2'-0".
5. ALL PANEL EDGES SHALL BE BLOCKED.
6. E A F INDICATES PLYWOOD SHEATHING SHALL BE PROVIDED ON EACH FACE OF THE WALL.
7. WHERE SHEATHING OCCURS ON BOTH SIDES OF WALL
-TOP PLATES AND ALL MEMBERS RECEIVING EDGE NAILING MUST BE A MINIMUM OF 3" NOMINAL THICKNESS
-SHEATHING SPLICES ON OPPOSITE SIDES OF THE WALL SHALL BE OFFSET TO FALL ON DIFFERENT FRAMING MEMBERS.
-NAILING ON OPPOSITE SIDES OF THE WALL SHALL BE STAGGERED.

B. NAILING
1. E.N. = EDGE NAILING F.N. = FIELD NAILING
2. ALL NAILS SHALL BE COMMON WIRE NAILS. SINKER OR BOX NAILS ARE NOT PERMITTED. 10d = 9 GA. x 3"
3. PROVIDE EDGE NAILING AROUND ALL OPENINGS
4. PREBORE HOLES WHERE FRAMING MEMBERS OR BLOCKING TENDS TO SPLIT.
5. THE MINIMUM EDGE DISTANCE IN THE FRAMING MEMBERS AND THE PLYWOOD SHALL BE 3/8" FOR 2 INCH NOMINAL RECEIVING MEMBERS AND 1/2" FOR 3 INCH NOMINAL RECEIVING MEMBERS.
6. ALL EDGE NAILING SHALL BE STAGGERED AT ADJOINING PANEL EDGES. SEE TYPICAL SHEAR PANEL ELEVATION ABOVE.
7. OVERDRIVEN NAILS INTO PLYWOOD SHEATHING ARE NOT ACCEPTABLE. ALL SHEATHING AND FRAMING DAMAGED BY OVERDRIVEN NAILS SHALL BE REPLACED BY THE CONTRACTOR.
8. NAILS IN FOUNDATION SILL PLATES SHALL BE HOT-DIPPED ZINC COATED GALVANIZED NAILS.

C. GENERAL
1. MINIMUM FRAMING MEMBER AND BLOCKING SIZES SHALL BE PER THE SHEAR WALL SCHEDULE AND THE TYPICAL SHEAR PANEL ELEVATION ABOVE.
2. ALL SILL PLATES AND STUDS BOLTED TO MASONRY OR CONCRETE SHALL BE PRESSURE TREATED.
3. RETIGHTEN ALL BOLTS PRIOR TO CLOSING WALL IN WITH SHEATHING OR FINISH.
4. NO UPSET THREADS ON ANCHOR BOLTS. THE CONTRACTOR SHALL ENSURE THAT ANCHOR BOLTS PROJECTING UP FROM THE FOUNDATION REMAIN UNDAMAGED DURING CONSTRUCTION.
5. THE ANCHOR BOLTS AND PLATE WASHERS SHALL BE TIGHTENED UNTIL EITHER THE WASHER BEGINS TO DEFORM OR THE WOOD JUST BEGINS TO CRUSH.

TYPICAL PLYWOOD SHEAR PANEL
2 / S1.1

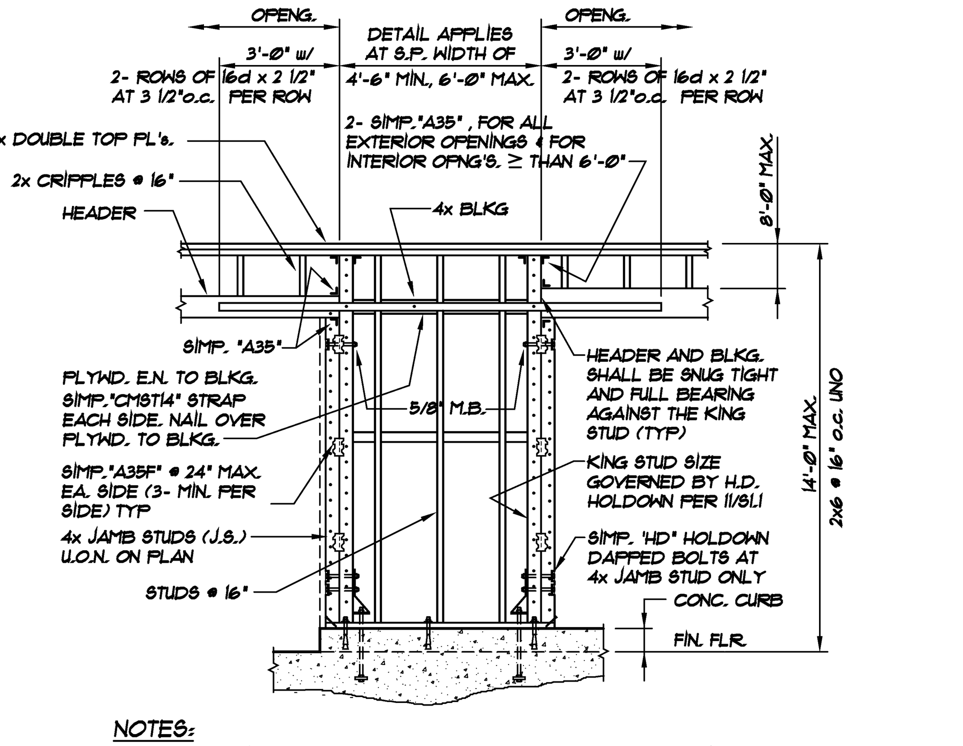

NOTES:
FOR BALANCE INFO SEE TYP. SINGLE OPENING WALL FRAMING DETAIL 3&4/S1.1

OPENING AT SHEAR PANEL
SCALE: 3/8"=1'-0" 5 / S1.1

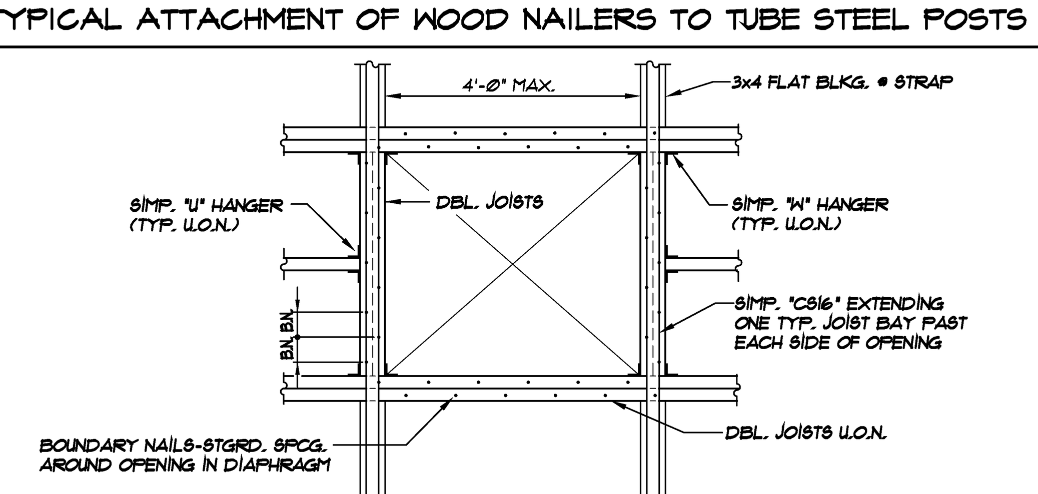

NOTES:
1. USE EDGE PLYWOOD NAILING AROUND ALL EDGES OF OPENING.
2. DOUBLE JOIST REQUIRED WHERE JOISTS ARE CUT.
3. A MAXIMUM OF TWO JOISTS AT TYPICAL SPACING, NOT TO EXCEED A 4'-0" MAX. OPENING, MAY BE CUT WITH THIS DETAIL.

FRAMING AT ROOF OPENINGS
9 / S1.1

3 x 1/8 x 1'-0" STRAPS REQUIRED FOR HOLE DIAM. OF 1/3 THE WIDTH OF WOOD PLATES. HOLES HAVING DIAMETERS GREATER THAN 1/3 PLATE WIDTH NOT PERMITTED.

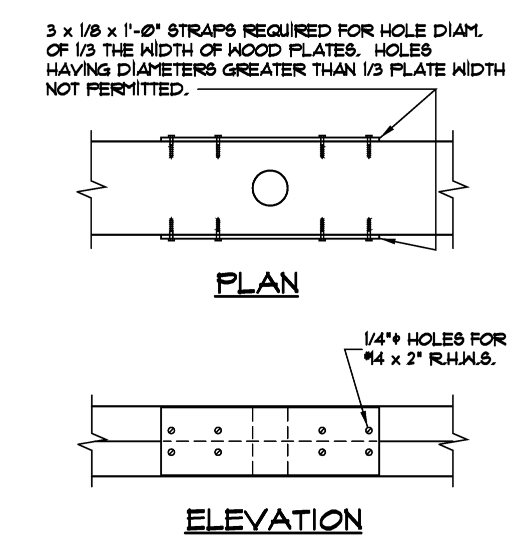

TYP. TOP PLATE CUTOUT
12 / S1.1

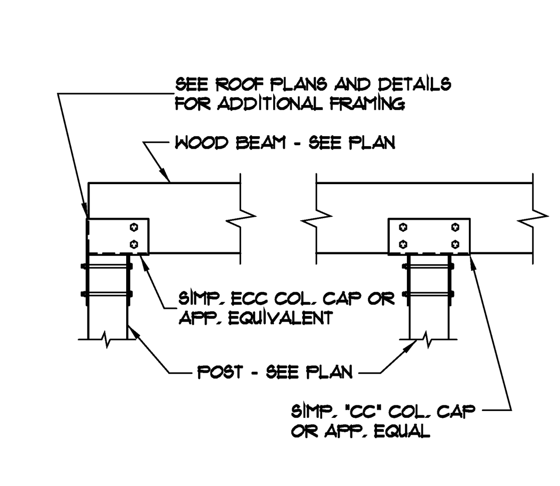

BEAM TO POST CONN.
13 / S1.1

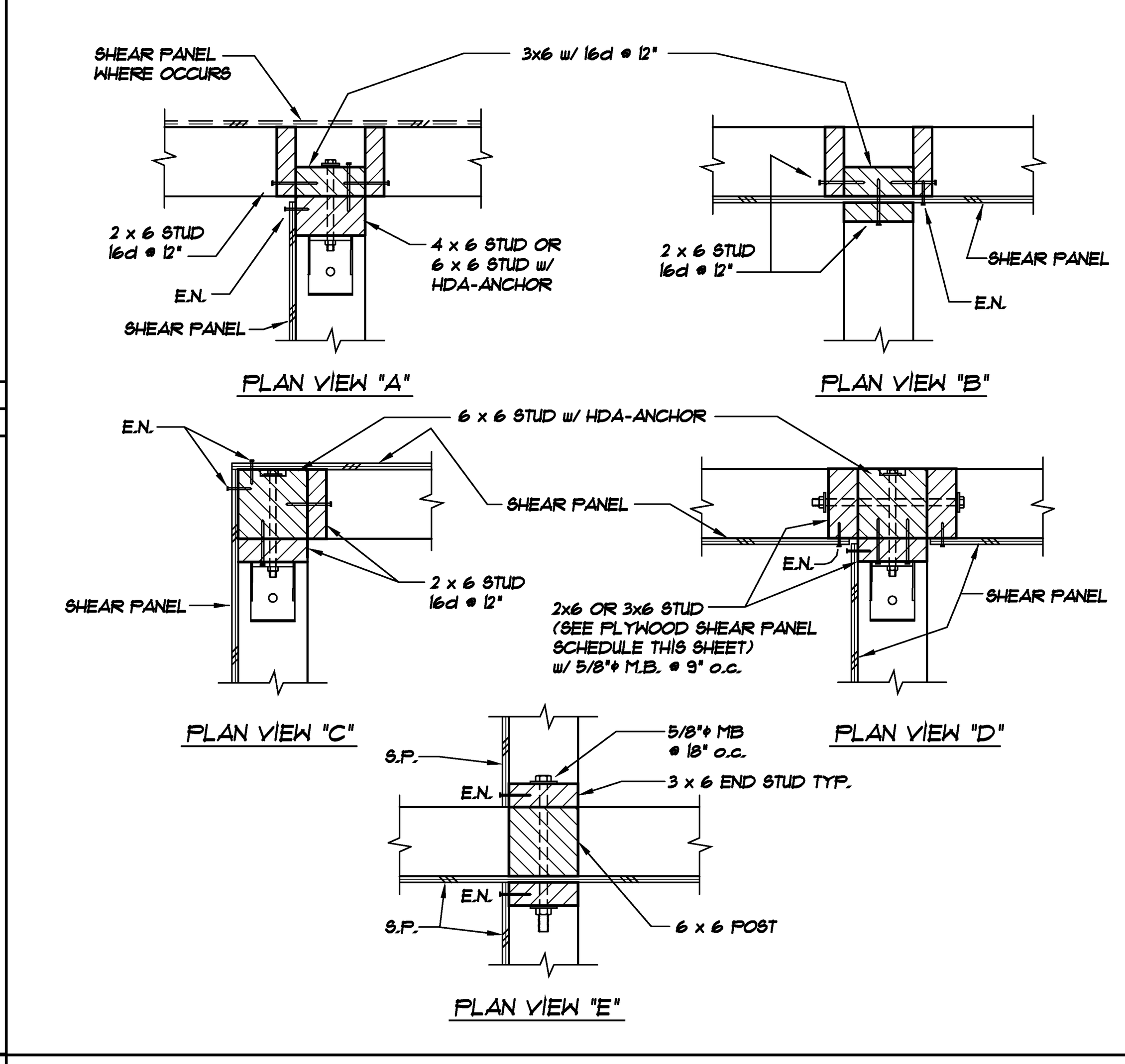

TYPICAL SHEAR PANEL CORNER AND INTERSECTION
14 / S1.1

REGISTERED PROFESSIONAL ENGINEER JAMES H. THOMPSON No. 1369 EXP. 3-31-2013 STRUCTURAL STATE OF CALIFORNIA

LICENSED ARCHITECT JAMES M. STINSON C19098 RENEWAL 02/28/13 STATE OF CALIFORNIA

IDENTIFICATION STAMP DIV. OF THE STATE ARCHITECT OFFICE OF REGULATION SERVICES
APPL 04-107199
AC ___ FLS ___ SS ___ DATE ___

THOMPSON & ASSOCIATES
STRUCTURAL ENGINEERS
2122 E. WALNUT STREET
PASADENA, CALIFORNIA 91107
PH (626)449-2970
FAX (626)449-4551

REVISIONS

P S W C GROUP
ARCHITECTS / PLANNERS
1887 BUSINESS CENTER DR., SUITE 3, SAN BERNARDINO, CA. 92408
909/890-2233 FAX. 909/890-2844

ROOSEVELT II
ELEMENTARY SCHOOL
SAN BERNARDINO CITY UNIFIED SCHOOL DISTRICT
1261 W. 16TH STREET, SAN BERNARDINO, CA.

GENERAL NOTES AND TYPICAL DETAILS
SCALE: N.T.S.

JOB NO.
DRAWN BY
DATE

S1.1

RE-BID #F09-02 ROOSEVELT II (HENRY) E.S. NEW CONSTRUCTION BID ISSUANCE SET 12/09/11