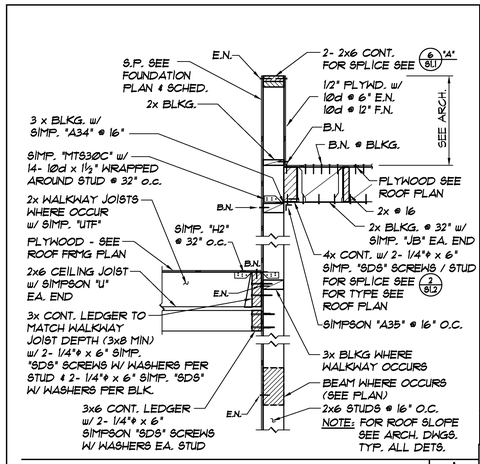

SECTION SCALE: 3/4" = 1'-0" A S4.0

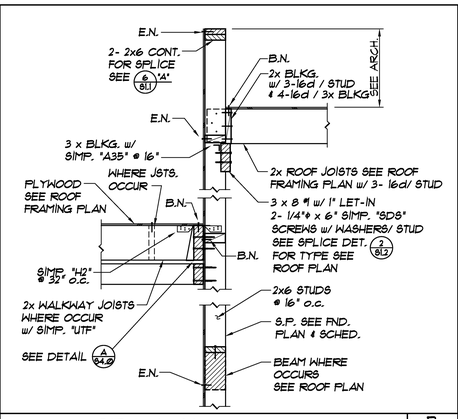

SECTION SCALE: 3/4" = 1'-0" B S4.0

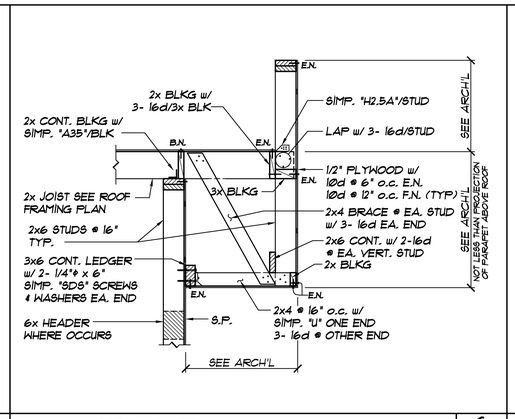

SECTION SCALE: 3/4" = 1'-0" C S4.0

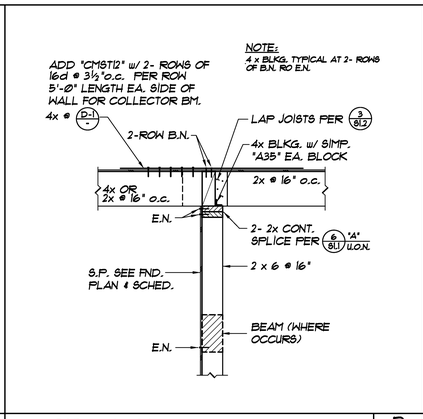

SECTION SCALE: 3/4" = 1'-0" D S4.0

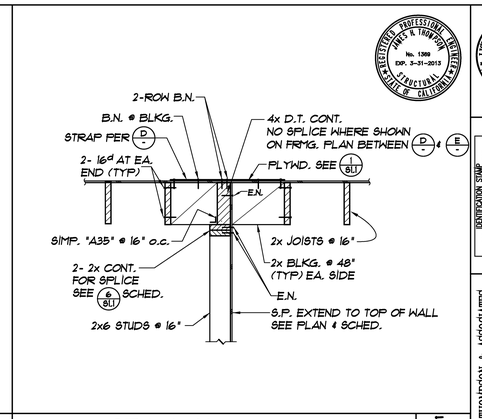

SECTION SCALE: 3/4" = 1'-0" E S4.0

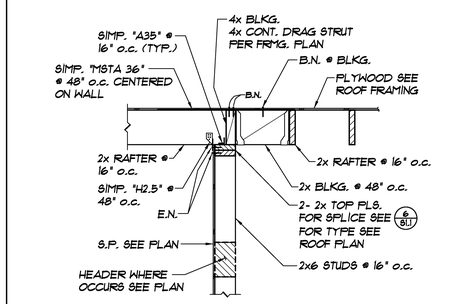

SECTION SCALE: 3/4" = 1'-0" F S4.0 F-1

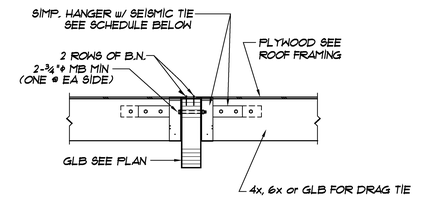

SIMP. "GLS" HANGER ADD SEISMIC TIE MODEL w/ 2-¾"Ø MB @ G/-

SIMP. "GLS" HANGER ADD SEISMIC TIE MODEL w/ 3-¾"Ø MB @ G-1/-

DETAIL SCALE: 3/4" = 1'-0" G S4.0

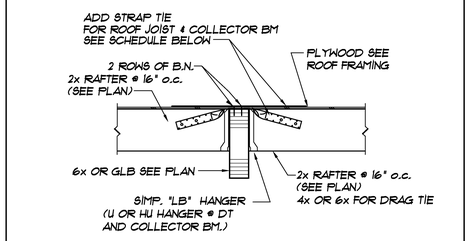

NOTE: BLKG SAME DEPTH AND WIDTH AS RAFTER

SIMP. "LSTA30" @ H/-

SIMP. "MSTI60" @ H-1/-

"CMSTI2" w/ 2- ROWS OF 16d @ 3½"o.c. PER ROW 5'-0" LENGTH EA. SIDE OF BM. @ H-2/-

"CMSTI2" w/ 2- ROWS OF 16d @ 3½" o.c. PER ROW 8'-0" LENGTH EA. SIDE OF BM. @ H-3/-

"CMSTI2" w/ 2- ROWS OF 16d @ 3½" o.c. PER ROW 5'-0" LENGTH EA. SIDE OF BM. w/ "H6A 50" @ H-4/-

SECTION SCALE: 3/4" = 1'-0" H S4.0

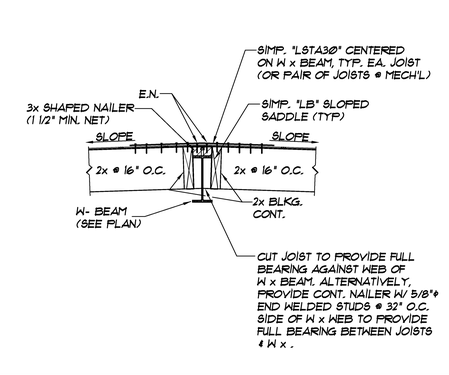

SECTION SCALE: 3/4" = 1'-0" J S4.0

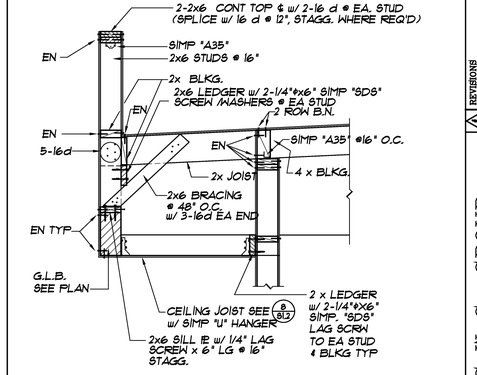

SECTION SCALE: 3/4" = 1'-0" K S4.0

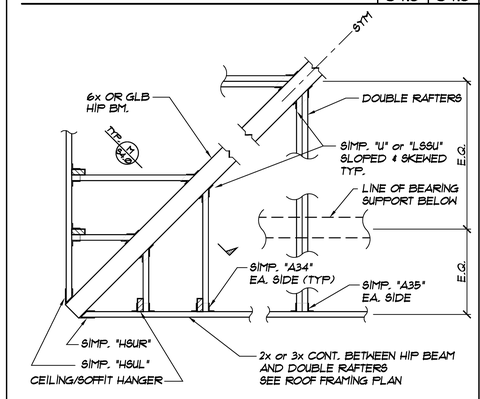

DETAIL SCALE: 3/4" = 1'-0" L S4.0

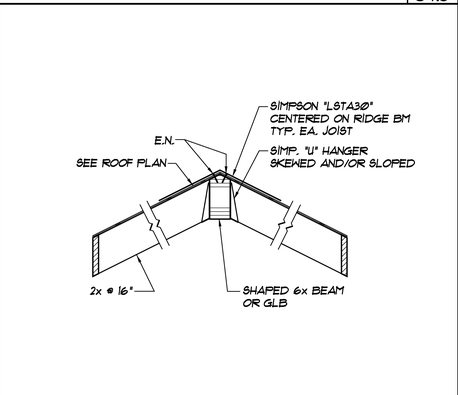

SECTION SCALE: 3/4" = 1'-0" M S4.0

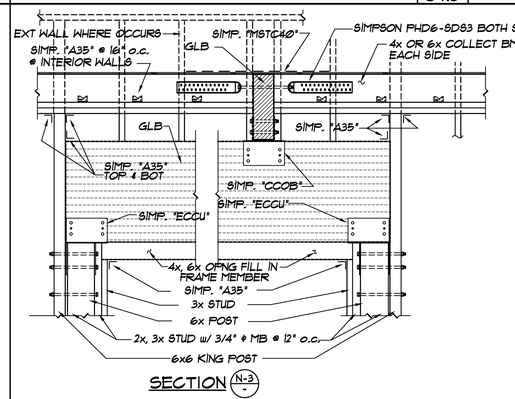

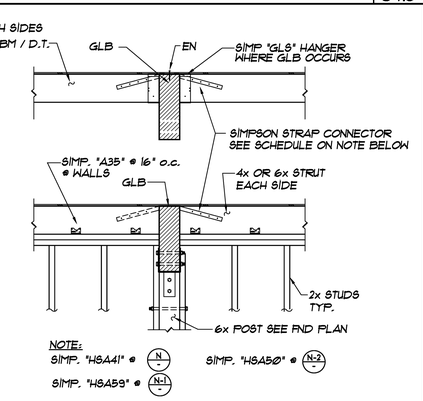

N S4.0 | N-1 S4.0 | N-2 S4.0 | N-3 S4.0

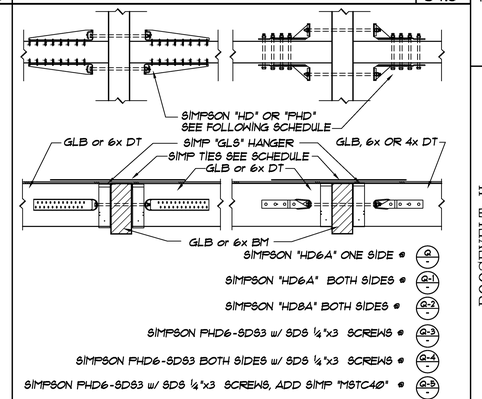

TIE DETAIL SCALE: 3/4" = 1'-0" Q S4.0

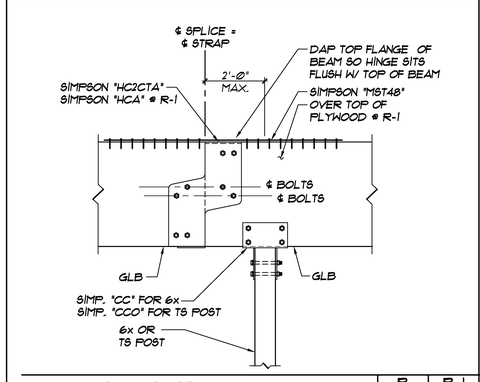

SECTION SCALE: 3/4" = 1'-0" R S4.0 R-1

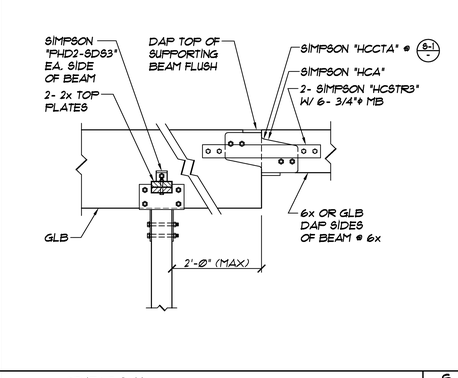

DETAIL SCALE: 3/4" = 1'-0" S S4.0

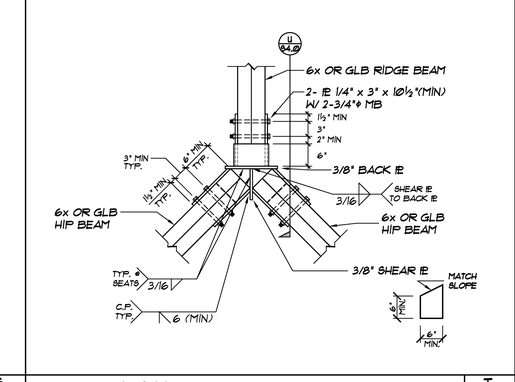

PLAN SCALE: 1" = 1'-0" T S4.0

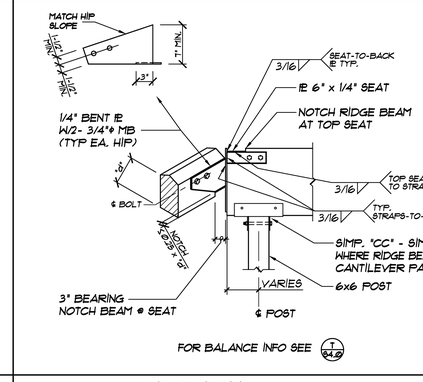

SECTION SCALE: 3/4" = 1'-0" U S4.0

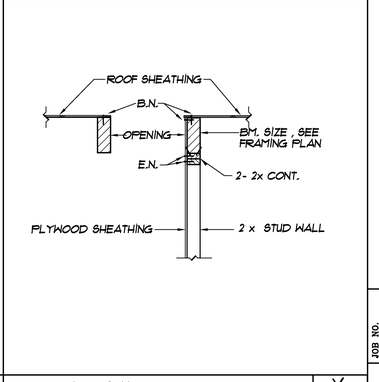

DETAIL SCALE: 3/4" = 1'-0" V S4.0

RE-BID #F09-02 ROOSEVELT II (HENRY) E.S. NEW CONSTRUCTION BID ISSUANCE SET 12/09/11

REVISIONS

P S W C GROUP
ARCHITECTS / PLANNERS
15817 BUSINESS CENTER DR., SUITE 9, SAN BERNARDINO, CA. 92408
909/880-2223 FAX. 909/880-2844

ROOSEVELT II ELEMENTARY SCHOOL
SAN BERNARDINO CITY UNIFIED SCHOOL DISTRICT
1281 W. 16TH STREET, SAN BERNARDINO, CA.

THOMPSON & ASSOCIATES
STRUCTURAL ENGINEERS
8122 E. WALNUT STREET
PASADENA, CALIFORNIA 91107
PH (626)449-2970
FAX (626)449-4651

IDENTIFICATION STAMP
INV. OF THE STATE ARCHITECT
OFFICE OF PUBLIC SCHOOL CONSTRUCTION
APPL. 04-107199
AC. ___ FS. ___ SS. ___
DATE: ___

SECTIONS & DETAILS
SCALE: AS NOTED

JOB NO.
DRAWN BY D.S.E.
DATE

S4.0