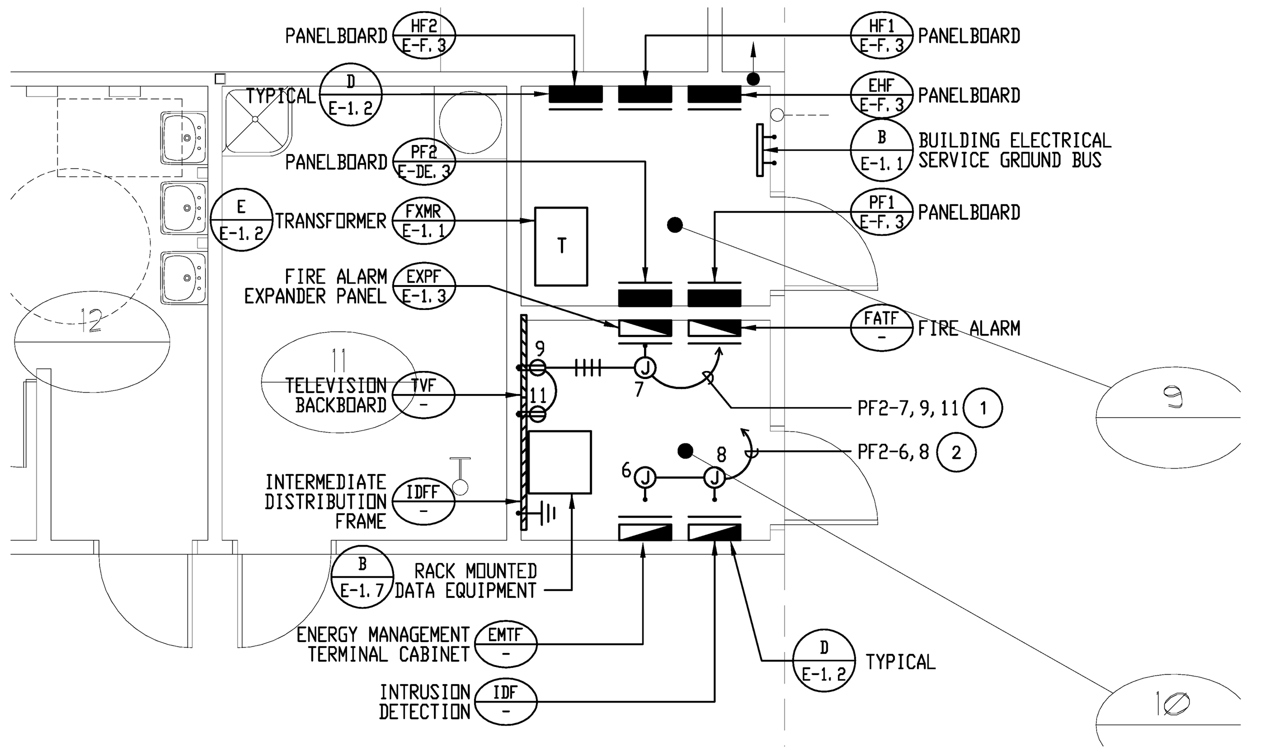

ENLARGED ELECTRICAL ROOMS

(A) SCALE: 1/8"=1'-0"

POWER AND CONTROL CONDUITS FOR HVAC
UNITS SHALL ROUTE THROUGH CURB, INSIDE UNIT.

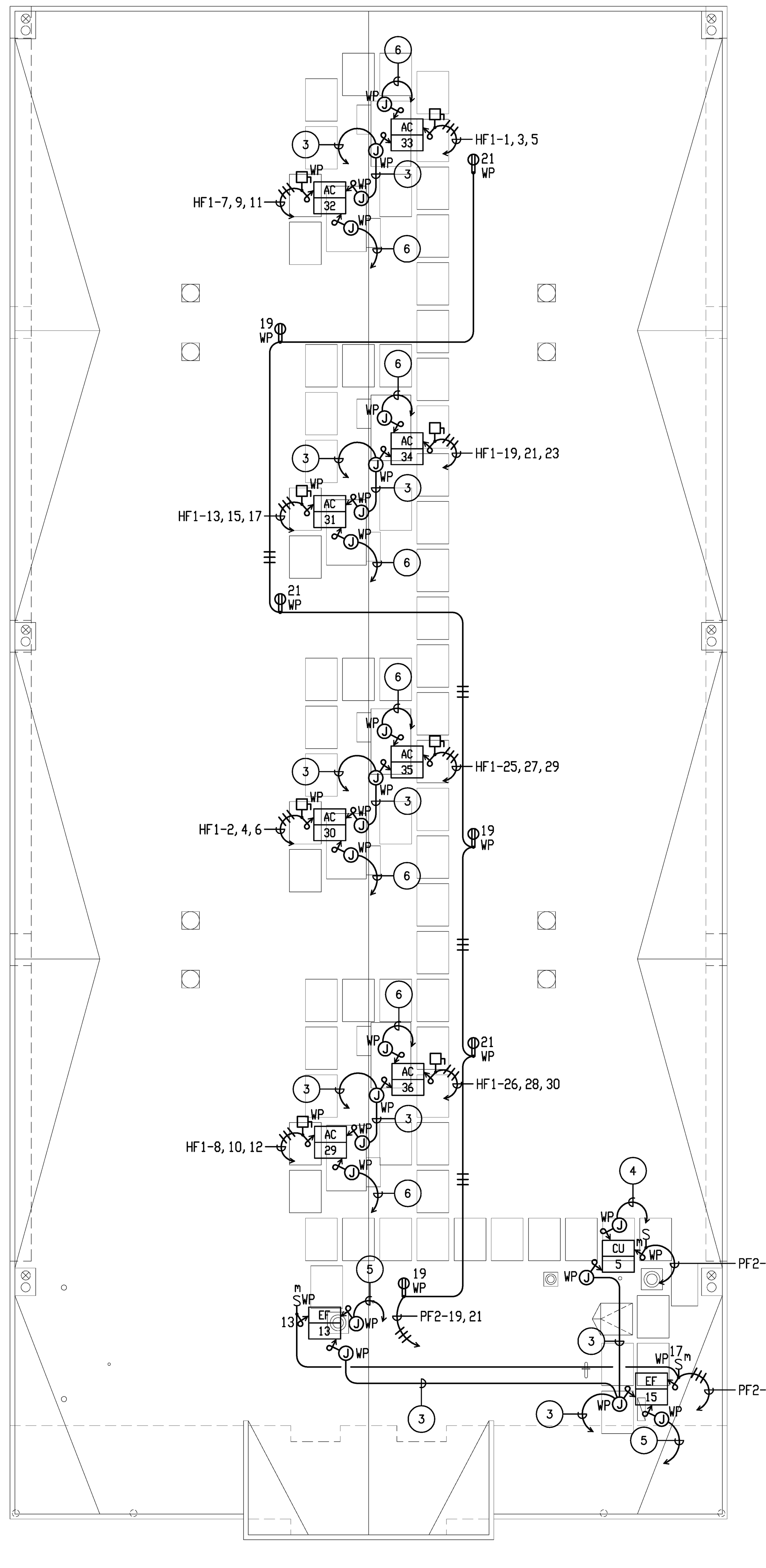

ROOF ELECTRICAL PLAN

(B) SCALE: 1/8"=1'-0"

Filename: I:\270\032\E-F.3.dwg (jmusick)
Dimscale: 1=1(PS) Date: DEC 06, 2011 Time: 4:09 PM
Xrefs: X-KEYPLAN-ROOSEVELT, X-Base-CLASS-F-ROOF, X-Base-CLASS-F, TITLEBLOCK

ROOSEVELT — PROJECT NO. 270.032

VOLTS 277/480, PHASE 3PH, 4W, MTG SURFACE — PANELBOARD HF1 — LOCATION ELECT. ROOM #9 — MAIN 400A/3P, BUS 400A

CKT	A	B	C	TYPE	BKR	QUAN	DESCRIPTION	PH
1	2936	-----	-----	M1	20/3	1	AC-33	A
3	-----	2936	-----	M1	--	-	---------	B
5	-----	-----	2936	M1	--	-	---------	C
7	2936	-----	-----	M1	20/3	1	AC-32	A
9	-----	2936	-----	M1	--	-	---------	B
11	-----	-----	2936	M1	--	-	---------	C
13	2936	-----	-----	M1	20/3	1	AC-31	A
15	-----	2936	-----	M1	--	-	---------	B
17	-----	-----	2936	M1	--	-	---------	C
19	2936	-----	-----	M1	20/3	1	AC-34	A
21	-----	2936	-----	M1	--	-	---------	B
23	-----	-----	2936	M1	--	-	---------	C
25	2936	-----	-----	M1	20/3	1	AC-35	A
27	-----	2936	-----	M1	--	-	---------	B
29	-----	-----	2936	M1	--	-	---------	C
31		-----	-----				PROVISION	A
33	-----		-----				PROVISION	B
35	-----	-----					PROVISION	C
37		-----	-----				PROVISION	A
39	-----		-----				PROVISION	B
41	-----	-----					PROVISION	C

PH	CKT	A	B	C	TYPE	BKR	QUAN	DESCRIPTION
A	2	2936	-----	-----	M1	20/3	1	AC-30
B	4	-----	2936	-----	M1	--	-	---------
C	6	-----	-----	2936	M1	--	-	---------
A	8	2936	-----	-----	M1	20/3	1	AC-29
B	10	-----	2936	-----	M1	--	-	---------
C	12	-----	-----	2936	M1	--	-	---------
A	14	4930	-----	-----	M1	100/3	1	'HF2 SUBFEED'
B	16	-----	4311	-----	M1	--	-	---------
C	18	-----	-----	2604	M1	--	-	---------
A	20	18496	-----	-----	G	175/3	1	'FXMR TRANSFORMER'
B	22	-----	15184	-----	G	--	-	SUBFEED
C	24	-----	-----	17580	G	--	-	---------
A	26	2936	-----	-----	M1	20/3	1	AC-36
B	28	-----	2936	-----	M1	--	-	---------
C	30	-----	-----	2936	M1	--	-	---------
A	32		-----	-----				PROVISION
B	34	-----		-----				PROVISION
C	36	-----	-----					PROVISION
A	38		-----	-----				PROVISION
B	40	-----		-----				PROVISION
C	42	-----	-----					PROVISION

CONNECTED: VA AMPS
PHASE A = 46914 169
PHASE B = 42983 155
PHASE C = 43672 158
TOTAL =133569 161

L.C.L. @ 125% = 102886
RECEPT. (> 10 kVA @ 50%) = 0
KITCHEN @ 65% = 0
OTHER LOAD @ 100% = 51260
TOTAL VA = 154146
TOTAL AMPS = 185

LOAD TYPE:
G - GENERAL (100%) M - MOTOR (100%)
L - L.C.L. (125%) M1 - MOTOR (125%)
R - RECEPTACLE (50%) X - X-RAY (100%)
(10 kVA @ 100%) X1 - X-RAY (50%)
K - KITCHEN (65%)

ROOSEVELT — PROJECT NO. 270.032

VOLTS 277/480, PHASE 3PH, 4W, MTG SURFACE — PANELBOARD EHF — LOCATION BUILDING F ROOM 9 — MAIN 100A/3P, BUS 100A

CKT	A	B	C	TYPE	BKR	QUAN	DESCRIPTION	PH
1	450	-----	-----	L	20/1	10	X1-BUILDING F EXT. EGRESS LTG.	A
3	-----	450	-----	L	20/1	10	BUILDING D EXT. EGRESS LTG.	B
5	-----	-----	450	L	20/1	10	BUILDING E EXT. EGRESS LTG.	C
7		-----	-----				SPARE	A
9	-----		-----				SPARE	B
11	-----	-----					SPARE	C
13		-----	-----				PROVISION	A
15	-----		-----				PROVISION	B
17	-----	-----					PROVISION	C
19		-----	-----				PROVISION	A
21	-----		-----				PROVISION	B
23	-----	-----					PROVISION	C

PH	CKT	A	B	C	TYPE	BKR	QUAN	DESCRIPTION
A	2		-----	-----		20/1		SPARE
B	4	-----		-----		20/1		SPARE
C	6	-----	-----			20/1		SPARE
A	8		-----	-----				PROVISION
B	10	-----		-----				PROVISION
C	12	-----	-----					PROVISION
A	14		-----	-----				PROVISION
B	16	-----		-----				PROVISION
C	18	-----	-----					PROVISION
A	20		-----	-----				PROVISION
B	22	-----		-----				PROVISION
C	24	-----	-----					PROVISION

CONNECTED: VA AMPS
PHASE A = 450 2
PHASE B = 450 2
PHASE C = 450 2
TOTAL = 1350 2

L.C.L. @ 125% = 1688
RECEPT. (> 10 kVA @ 50%) = 0
KITCHEN @ 65% = 0
OTHER LOAD @ 100% = 0
TOTAL VA = 1688
TOTAL AMPS = 2

LOAD TYPE:
G - GENERAL (100%) M - MOTOR (100%)
L - L.C.L. (125%) M1 - MOTOR (125%)
R - RECEPTACLE (50%) X - X-RAY (100%)
(10 kVA @ 100%) X1 - X-RAY (50%)
K - KITCHEN (65%)

X1 - INDICATES CIRCUIT CONTROLLED BY MULTI-POLE RELAY OPERATED BY PHOTOCELL ON/PHOTOCELL OFF FUNCTION OF EXTERIOR LIGHTING CONTROLLER.
MOUNT RELAY IN A SEPARATE BARRIERED COMPARTMENT.

ROOSEVELT — PROJECT NO. 270.032

VOLTS 277/480, PHASE 3PH, 4W, MTG SURFACE — PANELBOARD HF2 — LOCATION ELECT. ROOM #9 — MAIN L.O., BUS 100A

CKT	A	B	C	TYPE	BKR	QUAN	DESCRIPTION	PH
1	1302	-----	-----	L	20/1	14	CLASSROOM LTG.	A
3	-----	1302	-----	L	20/1	14	CLASSROOM LTG.	B
5	-----	-----	1302	L	20/1	14	CLASSROOM LTG.	C
7	1302	-----	-----	L	20/1	14	CLASSROOM LTG.	A
9	-----	1302	-----	L	20/1	14	CLASSROOM LTG.	B
11	-----	-----			20/1		SPARE	C
13		-----	-----		20/1		SPARE	A
15	-----		-----		20/1		SPARE	B
17	-----	-----			20/1		SPARE	C
19		-----	-----				PROVISION	A
21	-----		-----				PROVISION	B
23	-----	-----					PROVISION	C

PH	CKT	A	B	C	TYPE	BKR	QUAN	DESCRIPTION
A	2	1302	-----	-----	L	20/1	14	CLASSROOM LTG.
B	4	-----	1302	-----	L	20/1	14	CLASSROOM LTG.
C	6	-----	-----	1302	L	20/1	14	CLASSROOM LTG.
A	8	1024	-----	-----	L	20/1	16	CUSTODIAN/RR. LTG.
B	10	-----	405	-----	L	20/1	9	X2-EXTERIOR LTG.
C	12	-----	-----	1000	L	20/1	20	X2-WALKWAY LTG.
A	14		-----	-----		20/1		SPARE
B	16	-----		-----		20/1		SPARE
C	18	-----	-----					PROVISION
A	20		-----	-----				PROVISION
B	22	-----		-----				PROVISION
C	24	-----	-----					PROVISION

CONNECTED: VA AMPS
PHASE A = 4930 18
PHASE B = 4311 16
PHASE C = 3604 13
TOTAL = 12845 15

L.C.L. @ 125% = 16056
RECEPT. (> 10 kVA @ 50%) =
KITCHEN @ 65% =
OTHER LOAD @ 100% =
TOTAL VA = 16056
TOTAL AMPS = 19

LOAD TYPE:
G - GENERAL (100%) M - MOTOR (100%)
L - L.C.L. (125%) M1 - MOTOR (125%)
R - RECEPTACLE (50%) X - X-RAY (100%)
(10 kVA @ 100%) X1 - X-RAY (50%)
K - KITCHEN (65%)

X2 ? INDICATES CIRCUIT CONTROLLED BY MULTI-POLE RELAY OPERATED BY PHOTOCELL ON / TIMECLOCK OFF FUNCTION OF THE ENERGY MANAGEMENT SYSTEM.
MOUNT RELAY IN LIGHTING TERMINAL CABINET LCF.

ROOSEVELT — PROJECT NO. 270.032

VOLTS 120/208, PHASE 3PH, 4W, MTG SURFACE — PANELBOARD PF1 — LOCATION ELECT. ROOM #9 — MAIN 200A/3P, BUS 225A

CKT	A	B	C	TYPE	BKR	QUAN	DESCRIPTION	PH
1	680	-----	-----	R	20/1	2	CLASSROOM RECEPTS	A
3	-----	680	-----	R	20/1	2	CLASSROOM RECEPTS	B
5	-----	-----	1680	R	20/1	4	CLASSROOM RECEPTS	C
7	1680	-----	-----	R	20/1	4	CLASSROOM RECEPTS	A
9	-----	680	-----	R	20/1	2	CLASSROOM RECEPTS	B
11	-----	-----	680	R	20/1	2	CLASSROOM RECEPTS	C
13	1680	-----	-----	R	20/1	4	CLASSROOM RECEPTS	A
15	-----	1680	-----	R	20/1	4	CLASSROOM RECEPTS	B
17	-----	-----	680	R	20/1	2	CLASSROOM RECEPTS	C
19	680	-----	-----	R	20/1	2	CLASSROOM RECEPTS	A
21	-----	1680	-----	R	20/1	4	CLASSROOM RECEPTS	B
23	-----	-----	1680	R	20/1	4	CLASSROOM RECEPTS	C
25	680	-----	-----	R	20/1	2	CLASSROOM RECEPTS	A
27	-----	680	-----	R	20/1	2	CLASSROOM RECEPTS	B
29	-----	-----	1680	R	20/1	4	CLASSROOM RECEPTS	C
31	1680	-----	-----	R	20/1	4	CLASSROOM RECEPTS	A
33	-----		-----		20/1		SPARE	B
35	-----	-----			20/1		SPARE	C
37		-----	-----		20/1		SPARE	A
39	-----		-----				PROVISION	B
41	-----	-----					PROVISION	C

PH	CKT	A	B	C	TYPE	BKR	QUAN	DESCRIPTION
A	2	680	-----	-----	R	20/1	2	CLASSROOM RECEPTS
B	4	-----	680	-----	R	20/1	2	CLASSROOM RECEPTS
C	6	-----	-----	1680	R	20/1	4	CLASSROOM RECEPTS
A	8	1680	-----	-----	R	20/1	4	CLASSROOM RECEPTS
B	10	-----	680	-----	R	20/1	2	CLASSROOM RECEPTS
C	12	-----	-----	680	R	20/1	2	CLASSROOM RECEPTS
A	14	1680	-----	-----	R	20/1	4	CLASSROOM RECEPTS
B	16	-----	1680	-----	R	20/1	4	CLASSROOM RECEPTS
C	18	-----	-----	680	R	20/1	2	CLASSROOM RECEPTS
A	20	680	-----	-----	R	20/1	2	CLASSROOM RECEPTS
B	22	-----	1680	-----	R	20/1	4	CLASSROOM RECEPTS
C	24	-----	-----	1680	R	20/1	4	CLASSROOM RECEPTS
A	26	680	-----	-----	R	20/1	2	CLASSROOM RECEPTS
B	28	-----	680	-----	R	20/1	2	CLASSROOM RECEPTS
C	30	-----	-----	1680	R	20/1	4	CLASSROOM RECEPTS
A	32	1680	-----	-----	R	20/1	4	CLASSROOM RECEPTS
B	34	-----		-----		20/1		SPARE
C	36	-----	-----			20/1		SPARE
A	38	4296	-----	-----	G	125/3	1	PANELBOARD PF2
B	40	-----	4384	-----	G	--	-	---------
C	42	-----	-----	4780	G	--	-	---------

CONNECTED: VA AMPS
PHASE A = 18456 154
PHASE B = 15184 127
PHASE C = 17580 147
TOTAL = 51220 142

L.C.L. @ 125% = 0
RECEPT. (> 10 kVA @ 50%) = 23880
KITCHEN @ 65% = 0
OTHER LOAD @ 100% = 13460
TOTAL VA = 37340
TOTAL AMPS = 104

LOAD TYPE:
G - GENERAL (100%) M - MOTOR (100%)
L - L.C.L. (125%) M1 - MOTOR (125%)
R - RECEPTACLE (50%) X - X-RAY (100%)
(10 kVA @ 100%) X1 - X-RAY (50%)
K - KITCHEN (65%)

ROOSEVELT — PROJECT NO. 270.032

VOLTS 120/208, PHASE 3PH, 4W, MTG SURFACE — PANELBOARD PF2 — LOCATION ELECT. ROOM #9 — MAIN 125A/3P, BUS 225A

CKT	A	B	C	TYPE	BKR	QUAN	DESCRIPTION	PH
1	680	-----	-----	G	20/1	1	HAND DRYERS	A
3	-----	680	-----	G	20/1	1	HAND DRYERS	B
5	-----	-----	1680	R	20/1	7	CONV. RECEPTS	C
7	500	-----	-----	G	20/1	1	*FIRE ALARM PANEL	A
9	-----	500	-----	G	20/1	1	'TVF'	B
11	-----	-----	500	G	20/1	1	'IDFF'	C
13	506	-----	-----	M1	20/1	1	EF-13	A
15	-----	200	-----	M	20/1	1	COND. PUMP	B
17	-----	-----	506	M1	20/1	1	EF-15	C
19	540	-----	-----	R	20/1	3	ROOF RECEPTS.	A
21	-----	540	-----	R	20/1	3	ROOF RECEPTS.	B
23	-----	-----	200	G	20/1	1	*FSR BELL	C
25	70	-----	-----	M	15/2	1	FC-5	A
27	-----	70	-----	M	--	-	---------	B
29	-----	-----					PROVISION	C
31		-----	-----				PROVISION	A
33	-----		-----				PROVISION	B
35	-----	-----					PROVISION	C
37		-----	-----				PROVISION	A
39	-----		-----				PROVISION	B
41	-----	-----					PROVISION	C

PH	CKT	A	B	C	TYPE	BKR	QUAN	DESCRIPTION
A	2	1000	-----	-----	G	20/1	1	HAND DRYERS
B	4	-----	1000	-----	G	20/1	1	HAND DRYERS
C	6	-----	-----	500	G	20/1	1	'EMCF'
A	8	500	-----	-----	G	20/1	1	'IDF'
B	10	-----	884	-----	M1	20/2	1	CU-5
C	12	-----	-----	884	M1	--	-	---------
A	14	500	-----	-----	G	20/1	1	CP-1
B	16	-----	510	-----	M	20/1	1	EF-16
C	18	-----	-----	510	M	20/1	1	EF-17
A	20		-----	-----		20/1		SPARE
B	22	-----		-----		20/1		SPARE
C	24	-----	-----					PROVISION
A	26		-----	-----				PROVISION
B	28	-----		-----				PROVISION
C	30	-----	-----					PROVISION
A	32		-----	-----				PROVISION
B	34	-----		-----				PROVISION
C	36	-----	-----					PROVISION
A	38		-----	-----				PROVISION
B	40	-----		-----				PROVISION
C	42	-----	-----					PROVISION

CONNECTED: VA AMPS
PHASE A = 4296 36
PHASE B = 4384 37
PHASE C = 4780 40
TOTAL = 13460 37

L.C.L. @ 125% = 3475
RECEPT. (> 10 kVA @ 50%) = 2760
KITCHEN @ 65% = 0
OTHER LOAD @ 100% = 7920
TOTAL VA = 14155
TOTAL AMPS = 39

LOAD TYPE:
G - GENERAL (100%) M - MOTOR (100%)
L - L.C.L. (125%) M1 - MOTOR (125%)
R - RECEPTACLE (50%) X - X-RAY (100%)
(10 kVA @ 100%) X1 - X-RAY (50%)
K - KITCHEN (65%)

* PROVIDE CIRCUIT BREAKER LOCK-ON DEVICE.

PLAN NOTES:

1. PROVIDE 6#12, 1#12 GRD-3/4"C. PROVIDE SEPARATE NEUTRAL CONDUCTORS FOR EACH BRANCH CIRCUIT INDICATED. CONTINUE GROUND CONDUCTOR THROUGH ENTIRE LENGTH OF RUN.
2. PROVIDE 4#12, 1#12 GRD-3/4"C. PROVIDE SEPARATE NEUTRAL CONDUCTORS FOR EACH BRANCH CIRCUIT INDICATED. CONTINUE GROUND CONDUCTOR THROUGH ENTIRE LENGTH OF RUN.
3. PROVIDE 3/4"C.O. TO 'EMTC'.
4. PROVIDE 3/4"C. WITH INTERLOCKING CONTROL WIRING DOWN TO RESPECTIVE FAN COIL IN ACCORDANCE WITH EQUIPMENT MANUFACTURERS REQUIREMENTS.
5. PROVIDE 3/4"C. WITH INTERLOCKING CONTROL WIRING TO RESPECTIVE HVAC UNIT.
6. PROVIDE 3/4"C. WITH CONTROL WIRING DOWN TO THERMOSTAT.
7. PROVIDE 2" CONDUIT TO THE ENERGY MANAGEMENT TERMINAL CABINET. COORDINATE INSTALLATION OF LIGHTING CONROLS, RELAYS ETC. WITH THE EMS INSTALLER AND IN ACCORDANCE WITH DIVISION 15 SPECIFICATIONS.

MECHANICAL EQUIPMENT GENERAL NOTES:

1. VERIFY EXACT LOCATION OF MECHANICAL EQUIPMENT WITH MECHANICAL CONTRACTOR PRIOR TO INSTALLATION OF CONDUIT.
2. ALL EQUIPMENT, DEVICES, SAFETY SWITCHES, JUNCTION BOXES CONNECTIONS, ETC. MOUNTED ON THE ROOF OR EXTERIOR SHALL BE WEATHERPROOF.
3. REFER TO MECHANICAL DRAWING CONTROL DIAGRAM FOR ALL SENSORS, TIME CLOCKS, RELAYS, TIMERS, STARTERS, LINE AND LOW VOLTAGE CONDUIT AND PROVIDE AS REQUIRED.
4. SAFETY SWITCHES SHALL BE HORSEPOWER RATED WITH CURRENT LIMITING FUSES, SIZED PER THE MANUFACTURER'S RECOMMENDATION. SWITCHES SHALL HAVE 'RK-1' FUSE REJECTION CLIPS.
5. ELECTRICAL PLANS DO NOT INDICATE MECHANICAL AND PLUMBING EQUIPMENT CONTROL. REFER TO MECHANICAL AND PLUMBING PLANS AND SPECIFICATIONS AND PROVIDE ALL CONDUIT, WIRE, J-BOXES, OUTLET BOXES, RELAY SWITCHES, TIMESWITCHES, CONTROL CIRCUITS, ETC. REQUIRED FOR A COMPLETE AND OPERABLE MECHANICAL AND PLUMBING INSTALLATION. ALL WIRE SHALL BE INSTALLED IN CODE SIZED CONDUIT.
6. LOCATIONS OF SAFETY SWITCHES AND CONNECTIONS FOR MECHANICAL AND PLUBING EQUIPMENT ARE SHOWN DIAGRAMMATICALLY. VERIFY ACTUAL LOCATIONS WITH EQUIPMENT SHOP DRAWINGS AND LOCATE SAFETY SWITCHES LOCATED TO PROVIDE CODE REQUIRED CLEARANCES AND ACCESS. SAFETY SWITCHES LOCATED ON THE ROOF SHALL BE MOUNTED 30" MINIMUM ABOVE THE ROOF. IF THE MOUNTING OF SWITCHES DIRECTLY TO MECHANICAL EQUIPMENT IS NOT POSSIBLE, PROVIDE ANGLE IRON SUPPORT BRACKETS BOLTED TO THE ROOF FRAMING.

ROOM TITLES

● ONE-HOUR SEPARATION

1. CLASSROOM
2. CLASSROOM
3. CLASSROOM
4. CLASSROOM
5. CLASSROOM
6. CLASSROOM
7. CLASSROOM
8. CLASSROOM
9. ● DATA ROOM
10. ● ELECTRICAL
11. ● CUSTODIAN
12. BOYS TOILET
13. GIRLS TOILET
14. STORAGE
15. UNISEX STAFF TOILET
16. UNISEX STAFF TOILET

KEYPLAN

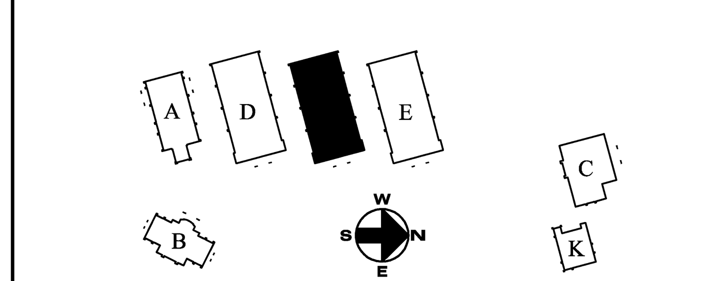

LICENSED ARCHITECT JAMES M. STINSON C19098 RENEWAL 02/28/ STATE OF CALIFORNIA

REGISTERED PROFESSIONAL ENGINEER STEPHEN R. ZAJICEK No. E 10372 Exp. 09-30-12 ELECTRICAL STATE OF CALIFORNIA

FBA Engineering
Consulting Electrical Engineers
3420 Irvine Avenue Suite 200
Newport Beach, California 92660-3189
TEL: 949 852 9995 FAX: 949 852 1657
EMAIL: fba@fbaengineering.net

FBA # 270.032

REVISIONS | DATE

P S W C GROUP
ARCHITECTS / PLANNERS
1887 BUSINESS CENTER DR., SUITE 3, SAN BERNARDINO, CA. 92408
909/890-2233 FAX. 909/890-2644

ROOSEVELT II
ELEMENTARY SCHOOL
SAN BERNARDINO CITY UNIFIED SCHOOL DISTRICT
1261 W. 16TH STREET, SAN BEERNARDINO, CA.

BUILDING F
ROOF AND ENLARGED
ELECTRICAL ROOM PLANS

JOB NO. P520
DRAWN BY FBA
DATE 12/8/2011

E-F.3

RE-BID #F09-02 ROOSEVELT II (HENRY) E.S. NEW CONSTRUCTION BID ISSUANCE SET 12/09/11