ELECTRICAL EQUIPMENT SUPPORT SCHEDULE

SEALS AND APPROVALS

EQ. NO./ SHEET NO.	EQUIPMENT OR SYSTEM DESCRIPTION	MAX WT (LBS)	HGT (IN)	LGTH (IN)	WIDTH (IN)	TYPE OF MOUNT	ANCHORAGE DETAIL	STRUCTURAL CALCULATION REFERENCE
MSES E-1.1	MAIN SERVICE ENTRY SWITCHBOARD	4800	90"	192"	48"	FLOOR SLAB	B/E-1.2	E-1
EG E-1.1	EMERGENCY GENERATOR	3500	106.77"	78.74"	41"	FLOOR SLAB	A/E-1.0	E-2
EDP E-1.1	EMERGENCY DISTRIBUTION PANEL	100	48"	24"	10"	CMU WALL MOUNTED	C/E-1.2	E-3
ATS E-1.1	AUTOMATIC TRANSFER SWITCH	100	48"	18"	10"	CMU WALL MOUNTED	C/E-1.2	E-3
AXMR E-A.2	TRANSFORMER 112.5 KVA	620	37"	30"	24"	FLOOR SLAB	E/E-1.2	E-1
EHA E-A.2	EMERGENCY PANELBOARD	100	48"	20"	6"	WALL MOUNTED WOOD STUD	D/E-1.2	E-4
PA1 E-A.2	PANELBOARD	100	48"	20"	6"	WALL MOUNTED WOOD STUD	D/E-1.2	E-4
PA2 E-A.2	PANELBOARD	100	48"	20"	6"	WALL MOUNTED WOOD STUD	D/E-1.2	E-4
HA1 E-A.2	PANELBOARD	100	48"	20"	6"	WALL MOUNTED WOOD STUD	D/E-1.2	E-4
ELC E-A.2	LIGHTING CONTROLLER	100	24"	20"	6"	WALL MOUNTED WOOD STUD	D/E-1.2	E-4
FACP & FATA E-A.2	FIRE ALARM CONTROL PANEL AND TERM. CAB.	100 (ea)	24"	20"	6"	WALL MOUNTED WOOD STUD	D/E-1.2	E-4
IDA & IDCP E-A.2	INTRUSION DETECTION CONTROL PANEL AND TERM.CAB.	100 (ea)	24"	20"	6"	WALL MOUNTED WOOD STUD	D/E-1.2	E-4
CSCP E-A.2	CLOCK SYSTEM CONTROL PANEL	100	24"	20"	6"	WALL MOUNTED WOOD STUD	D/E-1.2	E-4
EMTC E-A.2	ENERGY MGMT. TERM. CAB.	100	24"	20"	6"	WALL MOUNTED WOOD STUD	D/E-1.2	E-4
CABLE TRAY E-A.2	CABLE TRAY	86/FT.	6"	156"	12"	CEILING SUSPENDED	A/E-1.7	E-5
EQ. RACK E-A.2	TEL/DATA/TV RACK	120 (ea)	72"	24"	24"	FLOOR SLAB	B/E-1.7	E-6
9/968 E-B.1	SUSPENDED LINEAR FIXTURE	10/FT	6"	516"	6"	CEILING SUSPENDED	D/E-1.7	E-5
BXMR E-B.2	TRANSFORMER 75 KVA	585	37"	30"	20"	FLOOR SLAB	E/E-1.2	E-1
PB1 E-B.2	PANELBOARD	100	48"	20"	6"	WALL MOUNTED WOOD STUD	D/E-1.2	E-4
PB2 E-B.2	PANELBOARD	100	48"	20"	6"	WALL MOUNTED WOOD STUD	D/E-1.2	E-4
HB1 E-B.2	PANELBOARD	100	48"	20"	6"	WALL MOUNTED WOOD STUD	D/E-1.2	E-4
FATB & EXPB E-B.2	FIRE ALARM TERM. CAB. & EXPANDER PANEL	100 (ea)	24"	20"	6"	WALL MOUNTED WOOD STUD	D/E-1.2	E-4
IDB E-B.2	INTRUSION DETECTION AND TERM.CAB.	100	24"	20"	6"	WALL MOUNTED WOOD STUD	D/E-1.2	E-4
EMTB E-B.2	ENERGY MGMT. TERM. CAB.	100	24"	20"	6"	WALL MOUNTED WOOD STUD	D/E-1.2	E-4
CABLE TRAY E-B.2	CABLE TRAY	36/FT.	6"	36"	12"	CEILING SUSPENDED	A/E-1.7	E-5
EQ. RACK E-B.2	TEL/DATA/TV RACK	120	72"	24"	24"	FLOOR SLAB	B/E-1.7	E-6
9/968 E-C.1	SUSPENDED LINEAR FIXTURE	10/FT	6"	444"	6"	CEILING SUSPENDED	D/E-1.7	E-5
(2)9/384 E-C.1	SUSPENDED LINEAR FIXTURE	10/FT	6"	168"	6"	CEILING SUSPENDED	D/E-1.7	E-5
HC1 E-C.1	PANELBOARD	100	48"	20"	6"	WALL MOUNTED WOOD STUD	F/E-1.2	E-7
PC1 E-C.1	PANELBOARD	100	48"	20"	6"	WALL MOUNTED WOOD STUD	F/E-1.2	E-7
APA E-C.1	AUTONOMOUS PUBLIC ADDRESS RACK	120	48"	12"	12"	FLOOR SLAB	B/E-1.7	E-6
DXMR E-DE.3	TRANSFORMER 75 KVA	585	37"	30"	20"	FLOOR SLAB	E/E-1.2	E-1
PD1 E-DE.3	PANELBOARD	100	48"	20"	6"	WALL MOUNTED WOOD STUD	D/E-1.2	E-4
PD2 E-DE.3	PANELBOARD	100	48"	20"	6"	WALL MOUNTED WOOD STUD	D/E-1.2	E-4
HD1 E-DE.3	PANELBOARD	100	48"	20"	6"	WALL MOUNTED WOOD STUD	D/E-1.2	E-4
HD2 E-DE.3	PANELBOARD	100	48"	20"	6"	WALL MOUNTED WOOD STUD	D/E-1.2	E-4
FATD & EXPD E-DE.3	FIRE ALARM TERM. CAB. & EXPANDER PANEL	100 (ea)	24"	20"	6"	WALL MOUNTED WOOD STUD	D/E-1.2	E-4
IDD E-DE.3	INTRUSION DETECTION TERM. CAB.	100	24"	20"	6"	WALL MOUNTED WOOD STUD	D/E-1.2	E-4
EMTD E-DE.3	ENERGY MGMT. TERM. CAB.	100	24"	20"	6"	WALL MOUNTED WOOD STUD	D/E-1.2	E-4
EQ. RACK E-DE.3	TEL/DATA/TV RACK	120	72"	24"	24"	FLOOR SLAB	B/E-1.7	E-6
EXMR E-DE.3	TRANSFORMER 75 KVA	585	37"	30"	20"	FLOOR SLAB	E/E-1.2	E-1
PE1 E-DE.3	PANELBOARD	100	48"	20"	6"	WALL MOUNTED WOOD STUD	D/E-1.2	E-4
PE2 E-DE.3	PANELBOARD	100	48"	20"	6"	WALL MOUNTED WOOD STUD	D/E-1.2	E-4
HE1 E-DE.3	PANELBOARD	100	48"	20"	6"	WALL MOUNTED WOOD STUD	D/E-1.2	E-4
HE2 E-DE.3	PANELBOARD	100	48"	20"	6"	WALL MOUNTED WOOD STUD	D/E-1.2	E-4
FATE & EXPE E-DE.3	FIRE ALARM TERM. CAB. & EXPANDER PANEL	100 (ea)	24"	20"	6"	WALL MOUNTED WOOD STUD	D/E-1.2	E-4
IDE E-DE.3	INTRUSION DETECTION TERM. CAB.	100	24"	20"	6"	WALL MOUNTED WOOD STUD	D/E-1.2	E-4
EMTE E-DE.3	ENERGY MGMT. TERM. CAB.	100	24"	20"	6"	WALL MOUNTED WOOD STUD	D/E-1.2	E-4
EQ. RACK E-DE.3	TEL/DATA/TV RACK	120	72"	24"	24"	FLOOR SLAB	B/E-1.7	E-6
EXMR E-F.3	TRANSFORMER 75 KVA	585	37"	30"	20"	FLOOR SLAB	E/E-1.2	E-4
EHF E-F.3	EMERGENCY PANELBOARD	100	48"	20"	6"	WALL MOUNTED WOOD STUD	D/E-1.2	E-4
PF1 E-F.3	PANELBOARD	100	48"	20"	6"	WALL MOUNTED WOOD STUD	D/E-1.2	E-4
PF2 E-F.3	PANELBOARD	100	48"	20"	6"	WALL MOUNTED WOOD STUD	D/E-1.2	E-4
HF1 E-F.3	PANELBOARD	100	48"	20"	6"	WALL MOUNTED WOOD STUD	D/E-1.2	E-4
HF2 E-F.3	PANELBOARD	100	48"	20"	6"	WALL MOUNTED WOOD STUD	D/E-1.2	E-4
FATF & EXPF E-F.3	FIRE ALARM TERM. CAB. & EXPANDER PANEL	100 (ea)	24"	20"	6"	WALL MOUNTED WOOD STUD	D/E-1.2	E-4
IDF E-F.3	INTRUSION DETECTION TERM. CAB.	100	24"	20"	6"	WALL MOUNTED WOOD STUD	D/E-1.2	E-4
EMTF E-F.3	ENERGY MGMT. TERM. CAB.	100	24"	20"	6"	WALL MOUNTED WOOD STUD	D/E-1.2	E-4
EQ. RACK E-F.3	TEL/DATA/TV RACK	120	72"	24"	24"	FLOOR SLAB	B/E-1.7	E-6
DPHK E-K.2	DISTRIBUTION PANELBOARD	1200	90"	36"	24"	FLOOR SLAB	C/E-1.7	E-8
DPPK E-K.2	DISTRIBUTION PANELBOARD	1200	90"	36"	12"	FLOOR SLAB	C/E-1.7	E-8
KXMR E-K.2	TRANSFORMER 150 KVA	835	43.75"	32"	27"	FLOOR SLAB	E/E-1.2	E-1
EKA E-K.2	EMERGENCY PANELBOARD	100	48"	20"	6"	WALL MOUNTED WOOD STUD	D/E-1.2	E-4
PK1 E-K.2	PANELBOARD	100	48"	20"	6"	WALL MOUNTED WOOD STUD	D/E-1.2	E-4
PK2 E-K.2	PANELBOARD	100	48"	20"	6"	WALL MOUNTED WOOD STUD	D/E-1.2	E-4
HK1 E-K.2	PANELBOARD	100	48"	20"	6"	WALL MOUNTED WOOD STUD	D/E-1.2	E-4
FATK & EXPK E-K.2	FIRE ALARM TERM. CAB. & EXPANDER PANEL	100 (ea)	24"	20"	6"	WALL MOUNTED WOOD STUD	D/E-1.2	E-4
IDK E-K.2	INTRUSION DETECTION TERM. CAB.	100	24"	20"	6"	WALL MOUNTED WOOD STUD	D/E-1.2	E-4
EMTK E-K.2	ENERGY MGMT. TERM. CAB.	100	24"	20"	6"	WALL MOUNTED WOOD STUD	D/E-1.2	E-4
CABLE TRAY E-K.2	CABLE TRAY	36/FT.	6"	30"	12"	CEILING SUSPENDED	A/E-1.7	E-5
EQ. RACK E-K.2	TEL/DATA/TV RACK	120	72"	24"	24"	FLOOR SLAB	B/E-1.7	E-6

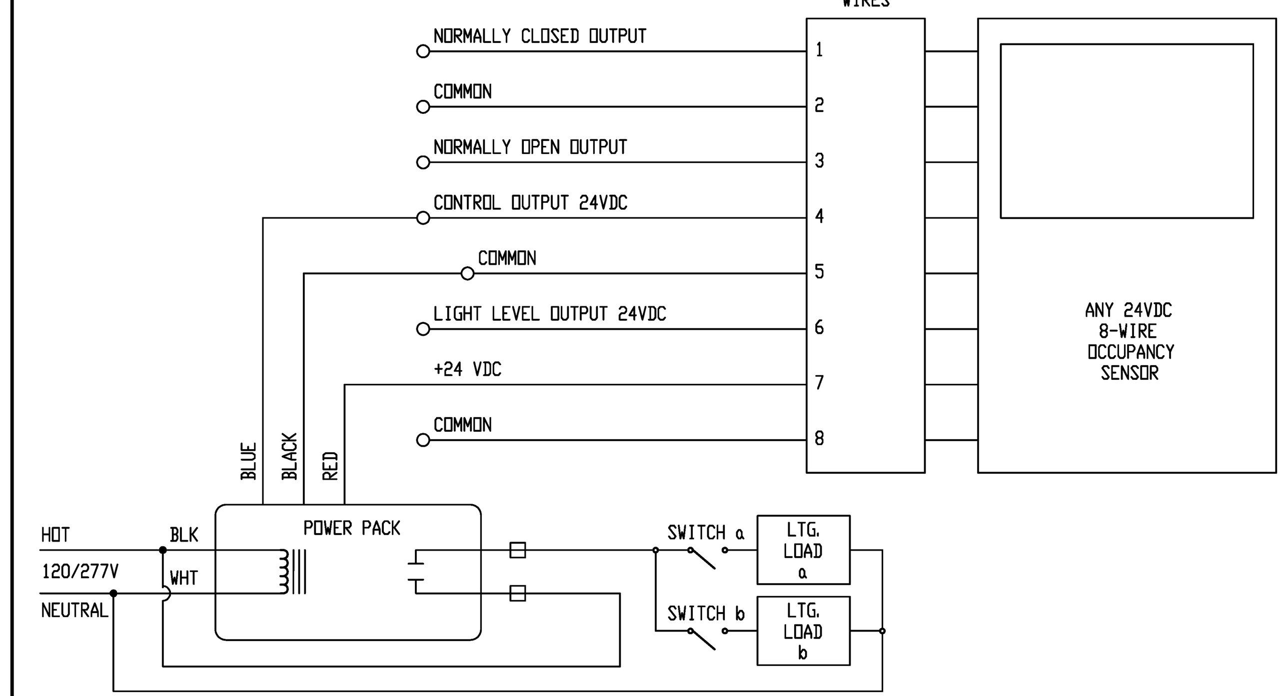

OCCUPANCY SENSOR DETAIL — SCALE N.T.S. — G

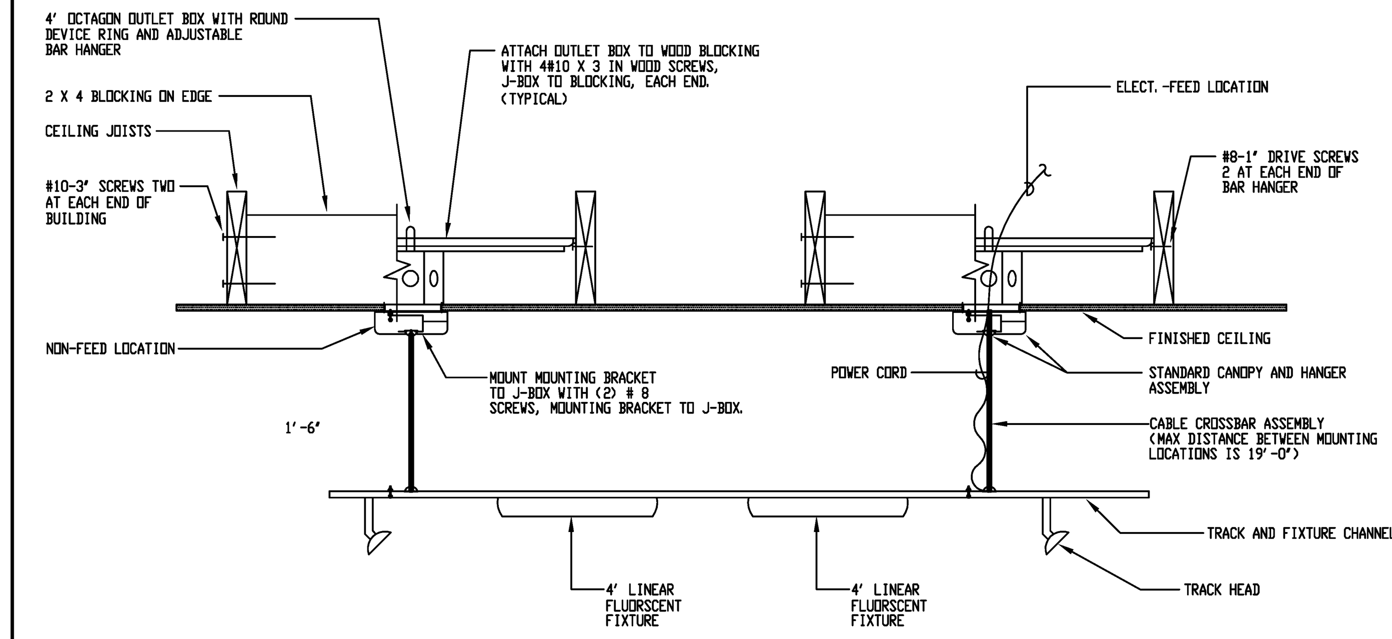

TRACK LUMINAIRE MOUNTING DETAIL — SCALE N.T.S. — D

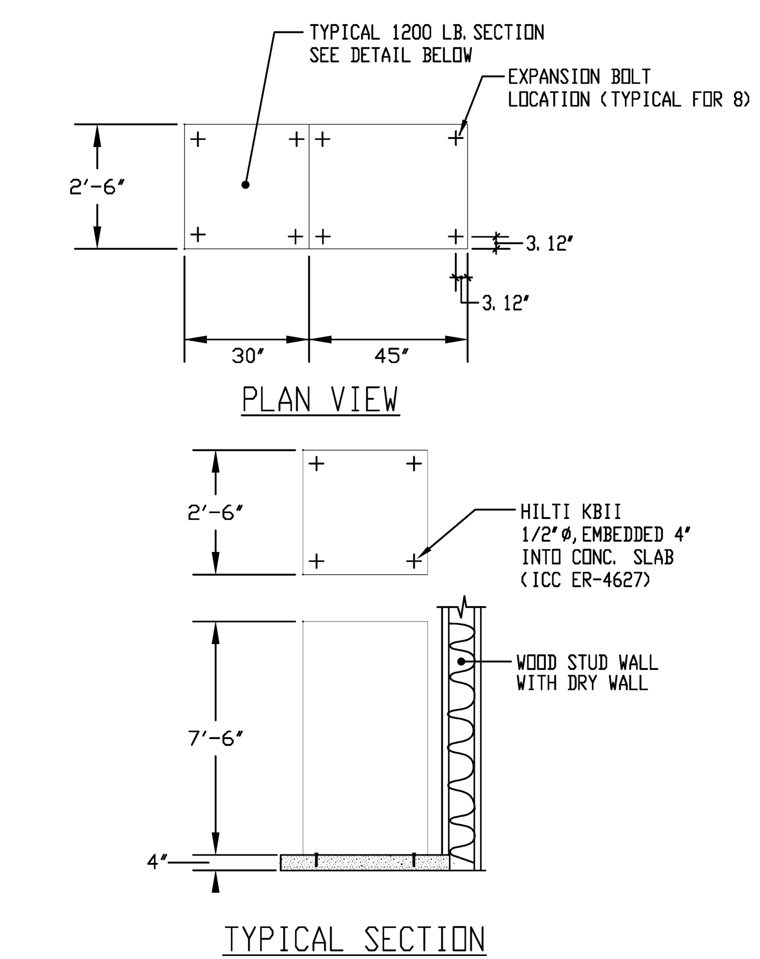

DISTRIBUTION PANELBOARD ANCHORAGE DETAIL — SCALE N.T.S. — C

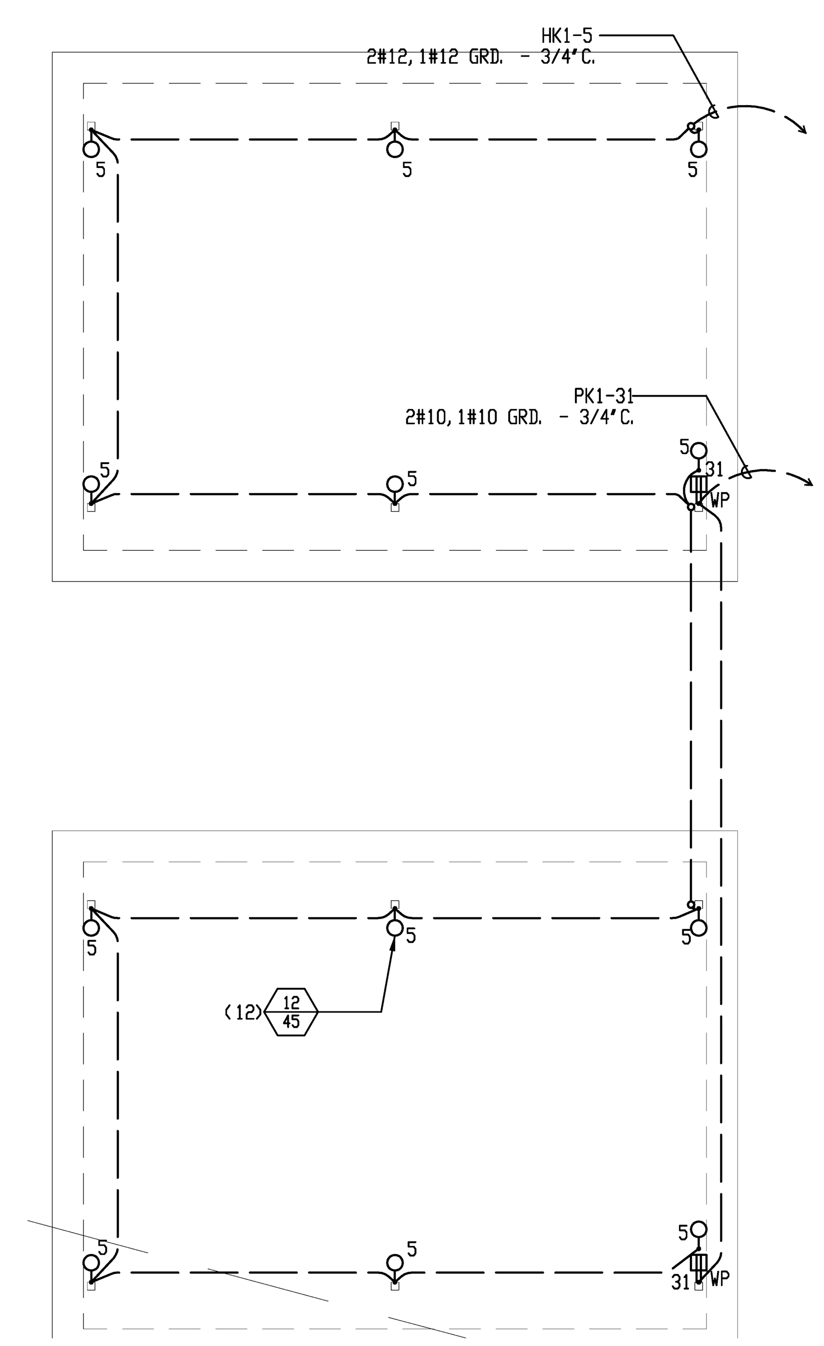

SHADE STRUCTURE LIGHTNG AND POWER — SCALE N.T.S. — E

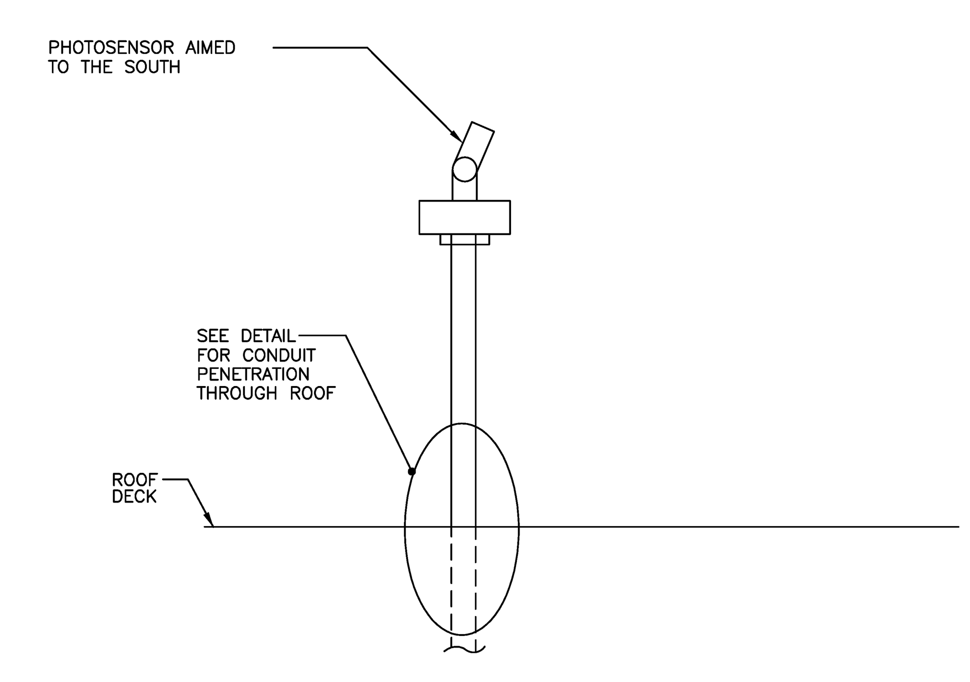

DETAIL FOR LIGHTING CONTROL PEC — SCALE N.T.S. — E

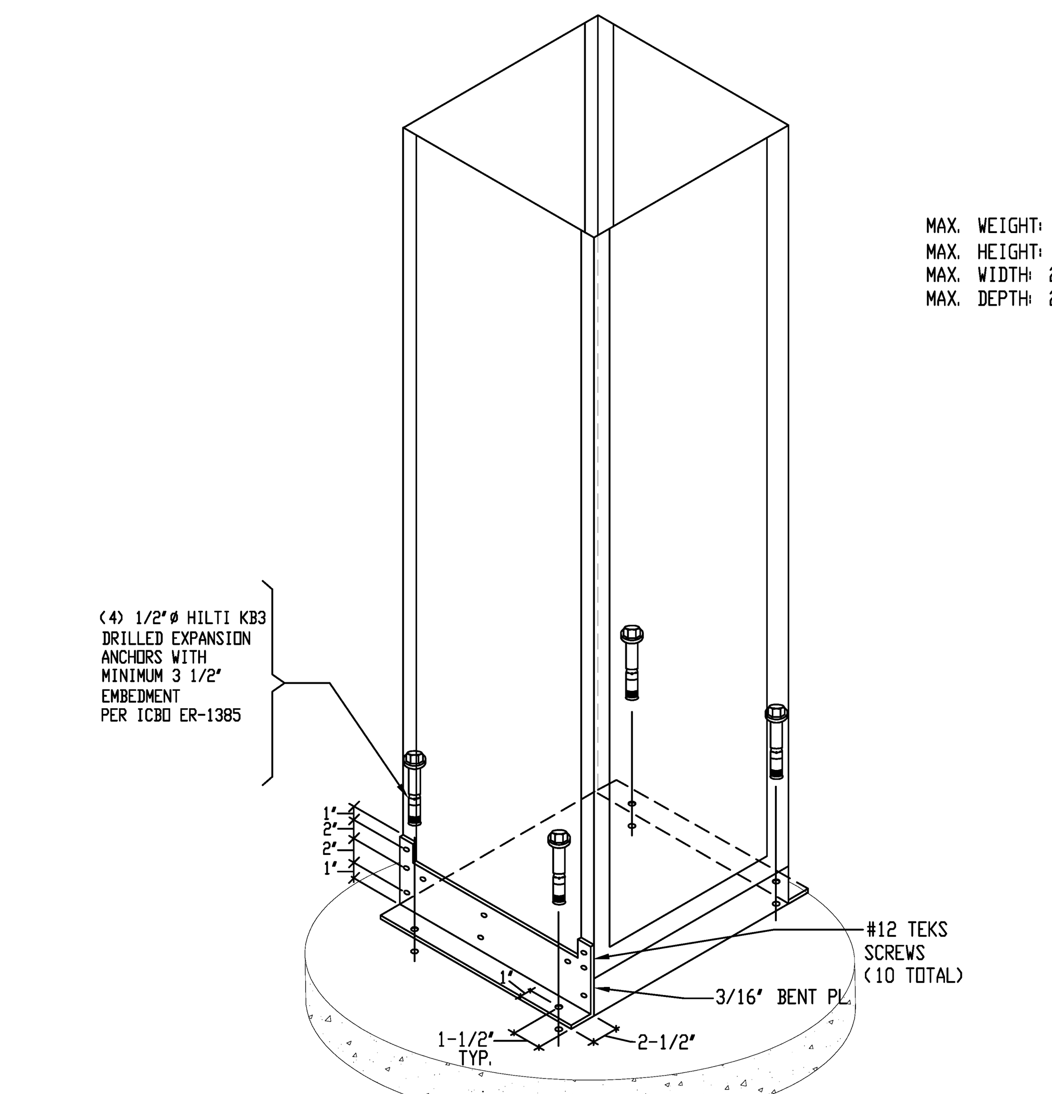

FLOOR MOUNTED RACK MOUNTING — SCALE N.T.S. — B

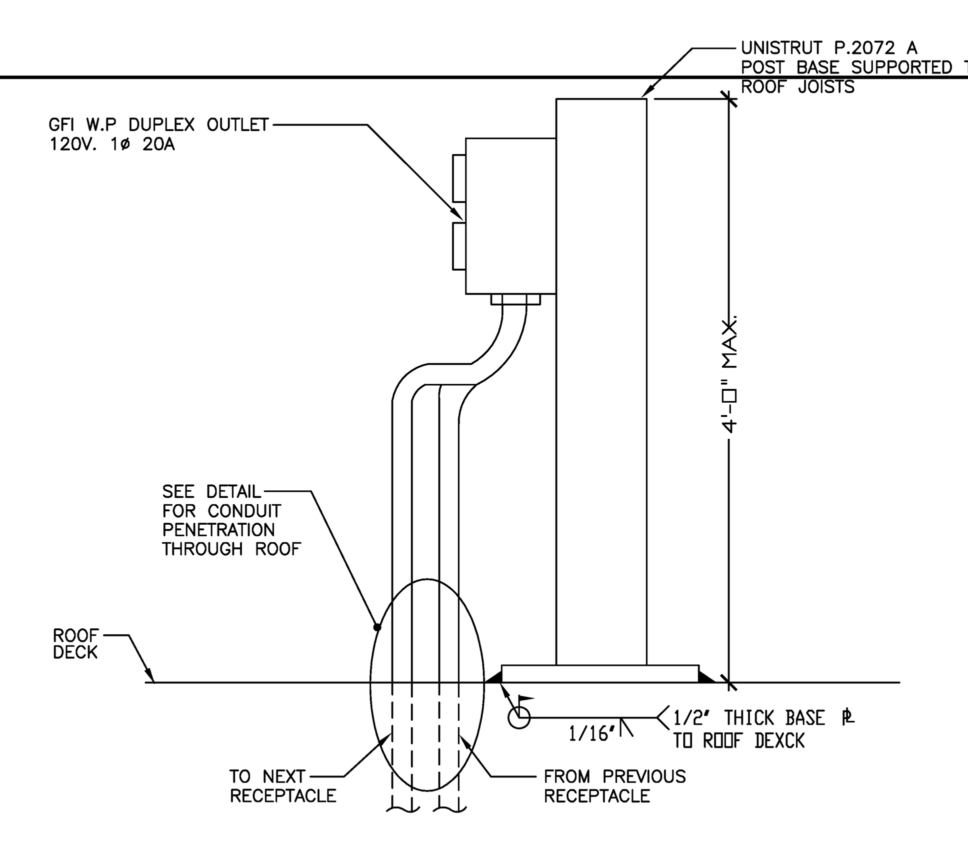

DETAIL FOR ROOF RECEPTACLE MOUNTING — SCALE N.T.S. — F

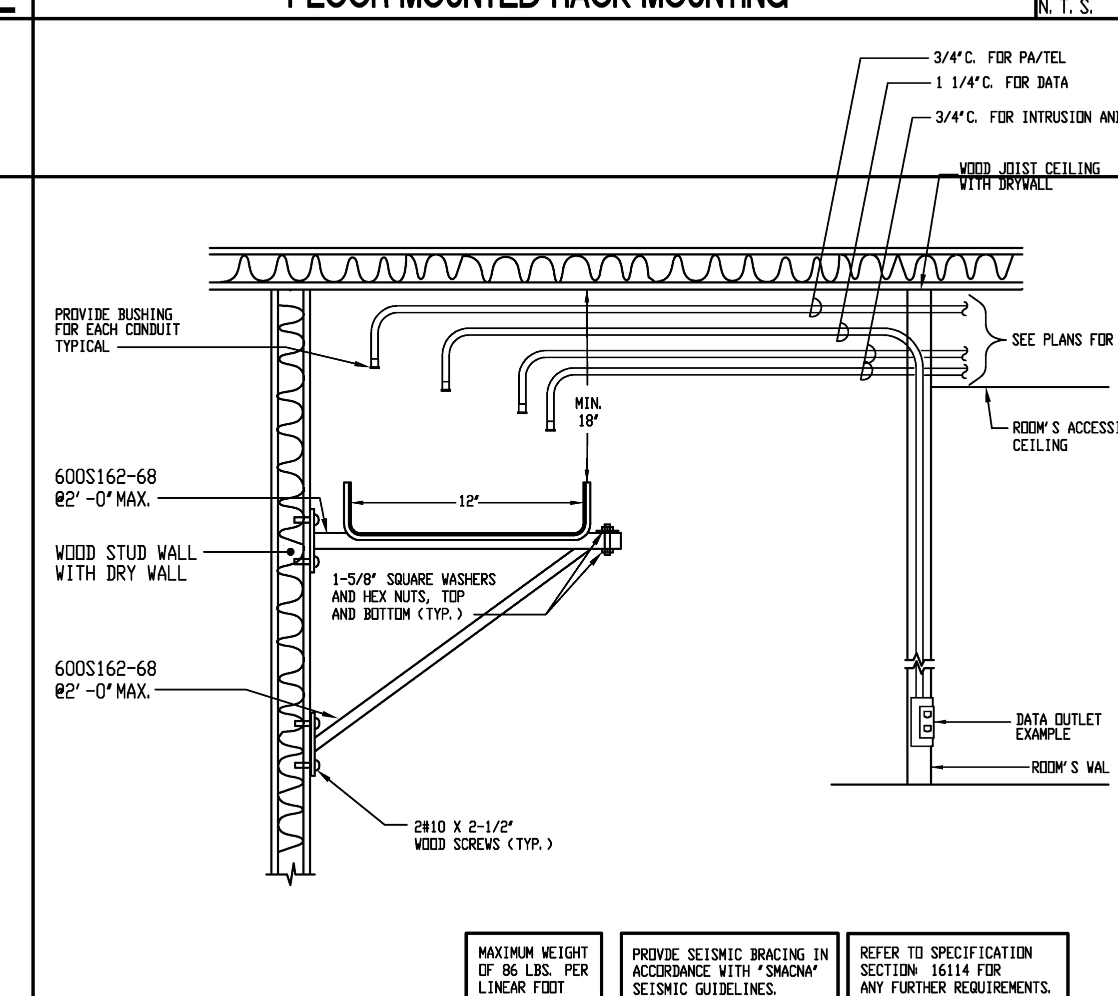

SIGNAL SYSTEM CABLE TRAY — SCALE N.T.S. — A

LICENSED ARCHITECT JAMES M. STINSON C19098 RENEWAL 02/28/ STATE OF CALIFORNIA

REGISTERED PROFESSIONAL ENGINEER STEPHEN R. ZAJICEK No. E 10372 Exp. 09-30-12 ELECTRICAL STATE OF CALIFORNIA

FBA Engineering
Consulting Electrical Engineers
3420 Irvine Avenue Suite 200
Newport Beach, California 92660-3169
TEL: 949 852 9995 FAX: 949 852 1657
EMAIL: fba@fbaengineering.net
FBA # 270.032

DATE	REVISIONS
-	-
-	-
-	-
-	-
-	-

P S W C GROUP
ARCHITECTS / PLANNERS
1887 BUSINESS CENTER DR., SUITE 3, SAN BERNARDINO, CA. 92408
909/890-2233 FAX. 909/890-2644

ROOSEVELT II
ELEMENTARY SCHOOL
SAN BERNARDINO CITY UNIFIED SCHOOL DISTRICT
1261 W. 16TH STREET, SAN BEERNARDINO, CA.

DETAILS

JOB NO. P520
DRAWN BY FBA
DATE 12/8/2011

E-1.7

RE-BID #F09-02 ROOSEVELT II (HENRY) E.S. NEW CONSTRUCTION BID ISSUANCE SET 12/09/11

Filename: I:\27D\032\E-1.7.dwg (jmusick) Dimscale: 1=1(PS) Date: DEC 07, 2011 Time: 10:13 AM Xrefs: X-SITE-ROOSEVELT, TITLEBLOCK