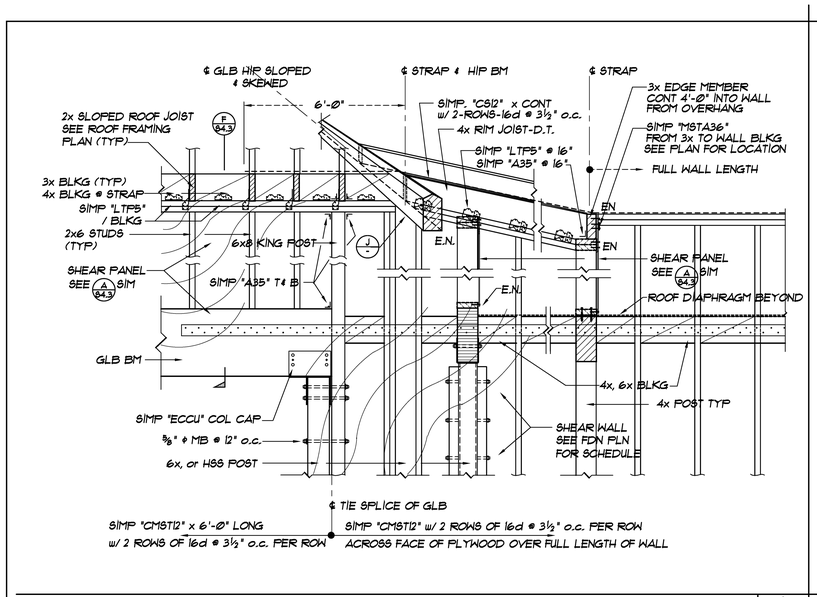

DETAIL — SCALE: 3/4" = 1'-0" — A / S4.4

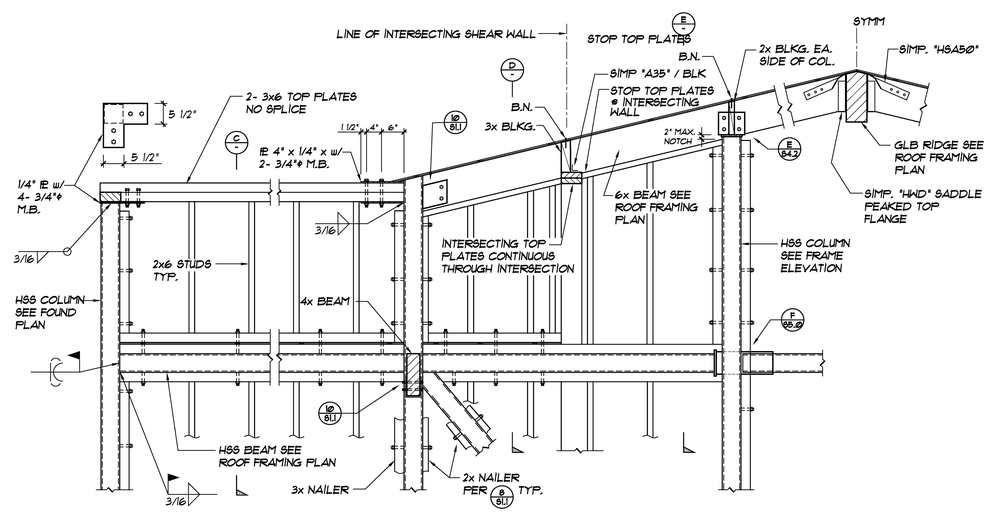

SECTION — SCALE: 3/4" = 1'-0" — B / S4.4

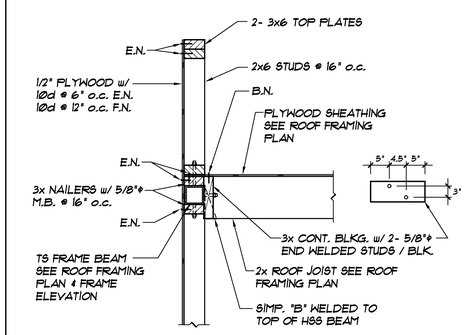

SECTION — SCALE: 3/4" = 1'-0" — C / S4.4

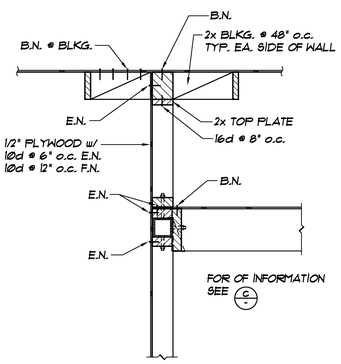

SECTION — SCALE: 3/4" = 1'-0" — D / S4.4

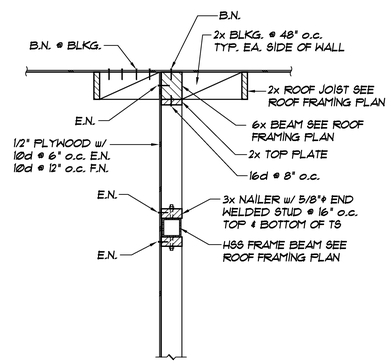

SECTION — SCALE: 3/4" = 1'-0" — E / S4.4

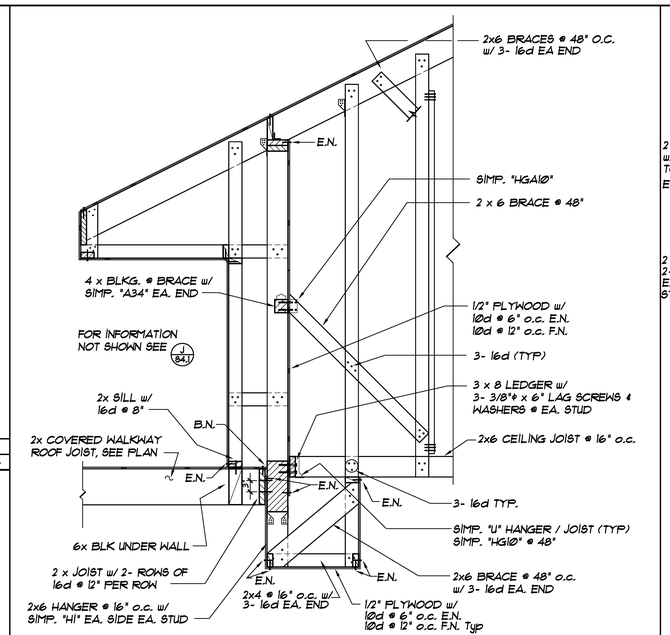

SECTION — SCALE: 3/4" = 1'-0" — F / S4.4

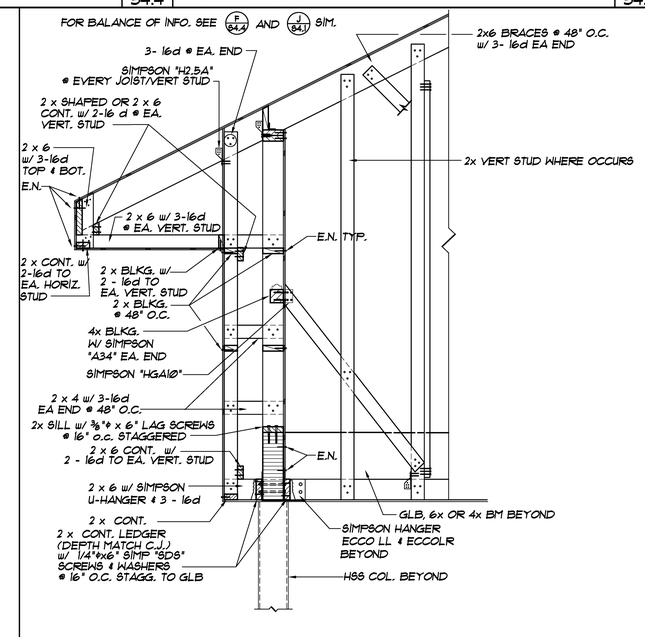

SECTION — SCALE: 3/4" = 1'-0" — H / S4.4

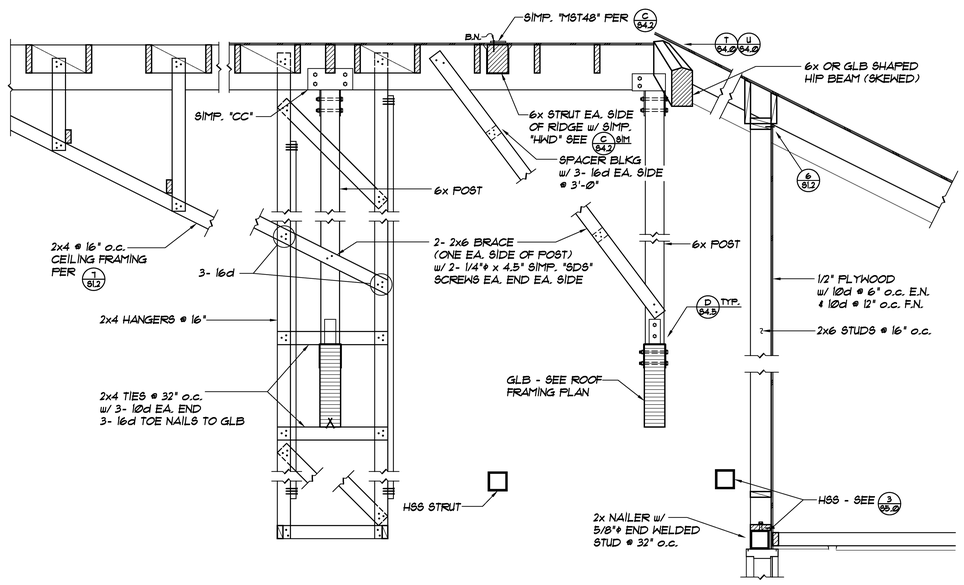

DETAIL — SCALE: 3/4" = 1'-0" — G / S4.4

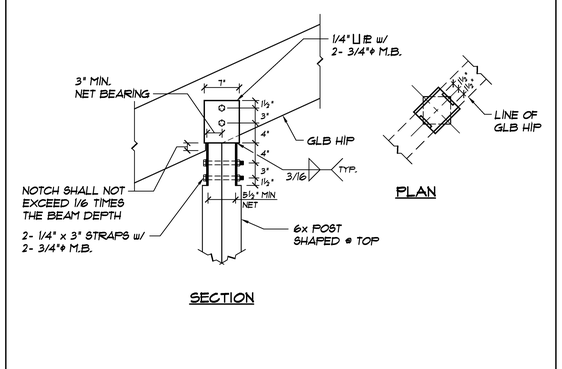

DETAIL — SCALE: 1" = 1'-0" — J / S4.4

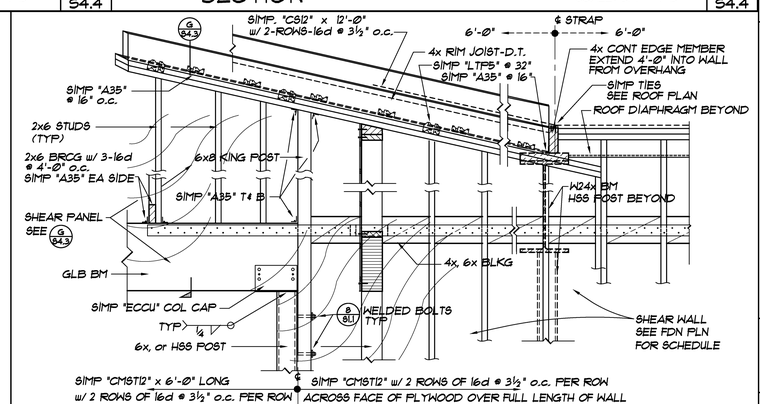

DETAIL — SCALE: 3/4" = 1'-0" — K / S4.4

REVISIONS

THOMPSON & ASSOCIATES
STRUCTURAL ENGINEERS
8122 E. WALNUT STREET
PASADENA, CALIFORNIA 91107
PH (626)449-2970
FAX (626)449-4651

P S W C GROUP
ARCHITECTS / PLANNERS
1897 BUSINESS CENTER DR., SUITE G, SAN BERNARDINO, CA. 92408
909/890-2253 FAX. 909/890-2644

ROOSEVELT II
ELEMENTARY SCHOOL
SAN BERNARDINO CITY UNIFIED SCHOOL DISTRICT
1261 W. 16TH STREET, SAN BERNARDINO, CA.

SECTIONS & DETAILS
SCALE: AS NOTED

JOB NO.
DRAWN BY F.R.
DATE

S4.4

RE-BID #F09-02 ROOSEVELT II (HENRY) E.S. NEW CONSTRUCTION BID ISSUANCE SET 12/09/11

Z:\CURRENT\SAN BERNARDINO SCHOOLS\14-1001 - ALESSANDRO & ROOSEVELT\ACAD\S4-4.dwg 12-07-11-9:38 AM