CLEANOUT FRAME AND COVER			
CLEAR OPENING	OVERALL BASE	HEIGHT FRAME	APPROXIMATE WEIGHT
10"	15"		110

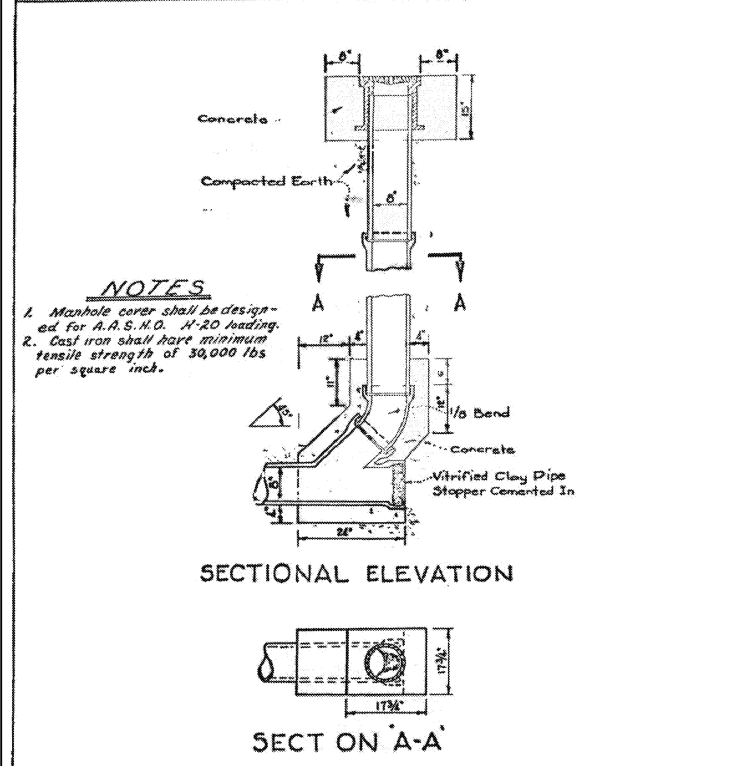

NOTES
1. Manhole cover shall be designed for A.A.S.H.O. H-20 loading.
2. Cast iron shall have minimum tensile strength of 30,000 lbs per square inch.

REV 3	Revised Standard No.	8/21/78
REV 2	Removed Note of Frame & Cover & Added Two Notes & Table	8/31/67
REV 1	Rev. Conc. to Agree With Spec.	7/23/65

CITY OF SAN BERNARDINO · PUBLIC WORKS DEPT.
STANDARD CLEANOUT
APPROVED: July 22 1955 — CITY ENGINEER
STANDARD No. 303

Rev. 3 WYE VERT. & Water line clearance & Lateral depth @ curb & P.L. Appr. 3-25-83

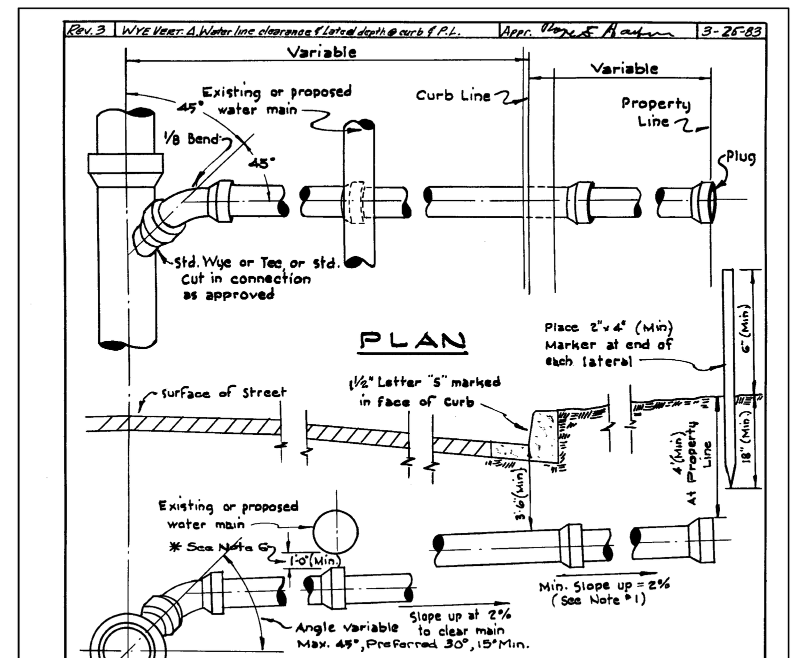

NOTES:
1. Sewer laterals shall have a minimum slope of 2% except as otherwise specifically noted on the plans.
2. Plugs shall be cemented in with cement mortar, or shall be neoprene stopper or approved equal.
3. In no case shall a lateral connect to the sewer main directly on top of the pipe.
4. Where a standard "Cut in Wye" or Tee is used, it shall be surrounded with 6" of Portland Cement Concrete.
5. Laterals shall end at the property line unless otherwise noted on the plans.
6. Where clearance is less than 1'-0" Standard Concrete Encasement shall be installed for a distance of 5'-0" on either side of the water main.

REV. 2 Revised Standard No. Appr. 8/21/78 | Rev. Added Note 6 Appr. 12-6-67

CITY OF SAN BERNARDINO · PUBLIC WORKS DEPT.
SEWER LATERAL NORMAL CUT
APPROVED 12-1, 1967 — CITY ENGINEER
STANDARD No. 305

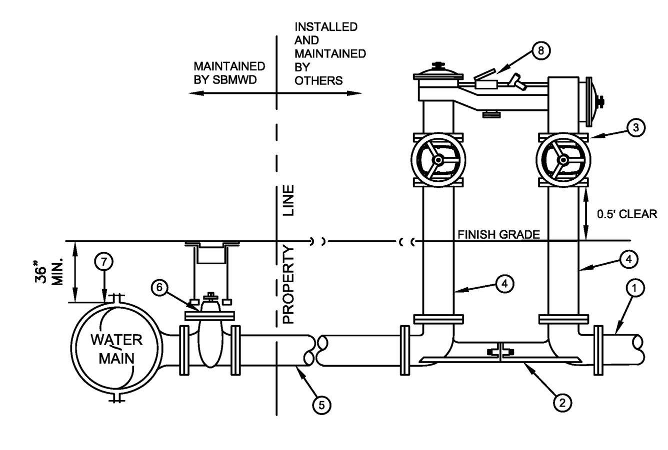

ITEM	QTY	DESCRIPTION
1	4 LF	STUB-OUT FOR SERVICE CONNECTION (MATERIAL SPECIFIED BY CUSTOMER)
2	1 EA	___" VALVE SETTER
3	1 EA	___" DOUBLE CHECK DETECTOR ASSEMBLY (FEBCO 876/876V OR APPROVED EQUAL)
4	2 EA	___" SCH. 40 STEEL OR DUCTILE IRON PIPE SPOOLS
5	___LF	___" CLASS 51 DUCTILE IRON PIPE (RESTRAINED) SEE SPECIFICATIONS FOR BACKFILL REQUIREMENTS
6	1 EA	___" FLANGE BY M.J. GATE VALVE ASSY PER SBMWD STD W 3.1
7	1 EA	EPOXY COATED TAPPING SLEEVE, MJ TAPPING SLEEVE, WELD NOZZLE, OR MJxFLG TEE ___" O.D. MAIN WITH ___" SERVICE LATERAL
8	1 EA	⅝" X ¾" PRECISION WATER METER W/ REGISTER READING IN 100S OF CUBIC FEET (METER TO BE PURCHASED FROM SBMWD PRIOR TO INSTALLATION).

M.H.L.	FEB. 05	
M.H.L.	FEB. 04	
S.W.L.	NOV. 99	
REVISION	DATE	

SAN BERNARDINO MUNICIPAL WATER DEPARTMENT
4" AND LARGER ABOVEGROUND FIRE SERVICE W/ DOUBLE CHECK DETECTOR CHECK ASSEMBLY
APPROVED ____ DATE ____ MATTHEW H. LITCHFIELD RCE 58079
SCALE: NONE
DRAWING NUMBER SBMWD W1.14

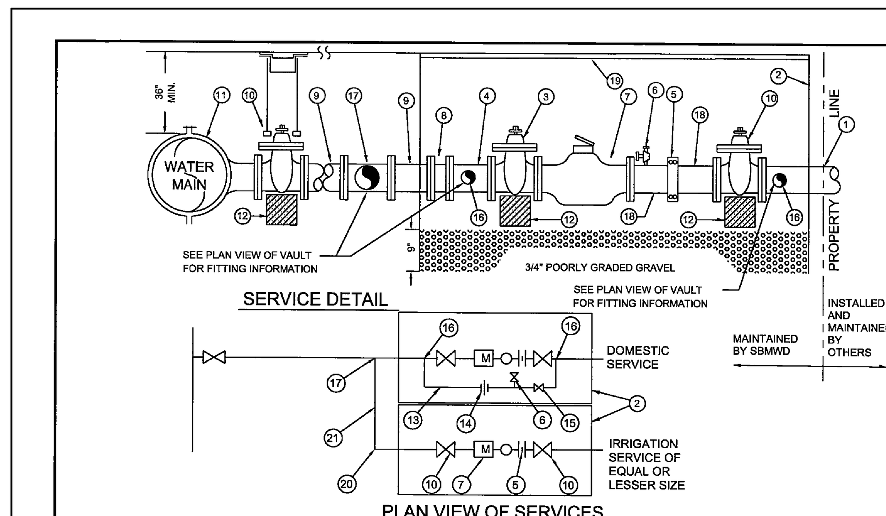

ITEM	QTY	DESCRIPTION
1	4 LF	___" STUB-OUT FOR SERVICE CONNECTION - MATERIAL SPECIFIED BY CUSTOMER
2	2 EA	4'x6' FIBERGLASS OR PRE-CAST CONCRETE VAULT (LARGER VAULT MAY BE REQUIRED)
3	1 EA	___" FLANGED GATE VALVE
4		DIP SPOOL (FLXFL)
5	2 EA	___" VICTAULIC COUPLING FROM THE WATER DEPARTMENT APPROVED LIST
6	2 EA	2" BRASS TEST PORT WITH WHEEL VALVE AND CAP
7	2 EA	___" WATER METER (SEE STD. DWG. W1.15 FOR APPROVED LIST)
8	1 EA	___" FLANGE x M.J. ADAPTER (RESTRAINED)
9		CLASS 150 DUCTILE IRON PIPE SPOOL (RESTRAINED) (PEXPE)
10	1 EA	___" FLANGE BY MJ GATE VALVE ASSEMBLY PER SBMWD STD. W3.1 (RESTRAINED)
11	1 EA	EPOXY COATED TAPPING SLEEVE, WELD NOZZLE, OR MJxFLG TEE FOR ___" O.D. MAIN WITH ___" SERVICE LATERIAL
12	5 EA	8" CONCRETE BLOCK
13	1 EA	SCH 40 STEEL BYPASS LOOP-ON DOMESTIC SERVICE ONLY (SIZE TO BE HALF THAT OF THE SERVICE)
14	1 EA	___" THREADED SCH 40 STEEL UNION
15	1 EA	___" THREADED GATE VALVE
16	2 EA	___" x ___" BRASS SERVICE SADDLE
17	1 EA	___" x ___" D.I. TEE (MJ) WITH ___" METER ASSEMBLY PER ABOVE SERVICE DETAIL (RESTRAINED)
18	_ EA	4" DIP SPOOL (GROOVED X FL)
19		4' X 6' DOUBLE DOOR ACCESS HATCH PER STD. DWG. W6.21
20	_ EA	___" DI (MJ) BEND (RESTRAINED)
21	_ LF	___" DIP

*NOTE: SEE SPECIFICATIONS FOR BACKFILL REQUIREMENTS

M.H.L.	FEB. 04	
S.W.L.	AUG. 99	
REVISION	DATE	

SAN BERNARDINO MUNICIPAL WATER DEPARTMENT
4" AND LARGER COMBINATION DOMESTIC AND IRRIGATION SERVICE DETAIL
APPROVED MATTHEW H. LITCHFIELD RCE 58079 DATE 8-25-04
SCALE: NONE
DRAWING NUMBER SBMWD W1.13

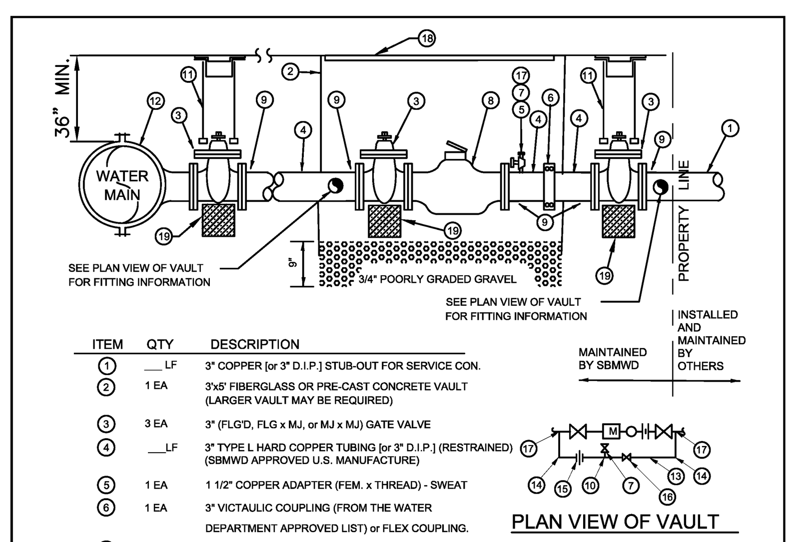

ITEM	QTY	DESCRIPTION
1	___LF	3" COPPER [or 3" D.I.P.] STUB-OUT FOR SERVICE CON.
2	1 EA	3'x5' FIBERGLASS OR PRE-CAST CONCRETE VAULT (LARGER VAULT MAY BE REQUIRED)
3	3 EA	3" (FLG'D, FLG x MJ, or MJ x MJ) GATE VALVE
4	___LF	3" TYPE L HARD COPPER TUBING [or 3" D.I.P.] (RESTRAINED) (SBMWD APPROVED U.S. MANUFACTURE)
5	1 EA	1 1/2" COPPER ADAPTER (FEM. x THREAD) - SWEAT
6	1 EA	3" VICTAULIC COUPLING (FROM THE WATER DEPARTMENT APPROVED LIST) or FLEX COUPLING.
7	1 EA	1 1/2" TEST PORT (w/ THREAD BRASS NIPPLE, BALL VALVE, AND PLUG)
8	1 EA	3" COMPOUND METER (SEE STD. DWG. W1.15 FOR APPROVED LIST) - ADD STRAINER BEFORE METER IF STRAINER IS ABSENT FROM METER
9	5 EA	3" BRASS COMPANION FLANGE (FLG x SWEAT) [or 3" MEGALUG RETAINER (MJ)]
10	1 EA	1 1/2" BRASS TEE (THREADED)
11	2 EA	8" GATE VALVE CAN ASSEMBLY (per SBMWD STD. DWG. W3.1)
12	1 EA	EPOXY COATED TAPPING SLEEVE, MJ TAPPING SLEEVE, WELD NOZZLE, OR MJxFLG TEE ___" O.D. MAIN WITH 3" SERVICE LATERAL
13	1 EA	1 1/2" BYPASS LOOP - BRASS THREADED PIPE (US MANUFACTURE)
14	2 EA	1 1/2" BRASS QUARTER BEND (THREADED)
15	1 EA	1 1/2" BRASS - THREE PART UNION (FEM.)
16	1 EA	1 1/2" BRASS LOCK-WING BALL VALVE or 1 1/2" CORPORATION STOP
17	3 EA	3" x 1 1/2" COPPER TEE (SWEAT X FEM. THREAD)[OR 3" x 1 1/2" BRONZE SERVICE SADDLE]
18		3' X 5' DOUBLE DOOR ACCESS HATCH PER STD. DWG. W6.21
19	3 EA	8" CONCRETE BLOCK SUPPORT

M.H.L.	FEB. 05	
R.L.L.	FEB. 04	
S.W.L.	FEB. 00	
S.W.L.	AUG. 99	
REVISION	DATE	

SAN BERNARDINO MUNICIPAL WATER DEPARTMENT
3" DOMESTIC SERVICE
APPROVED ____ DATE ____ MATTHEW H. LITCHFIELD RCE 58079
SCALE: NONE
DRAWING NUMBER SBMWD W1.4

CONFIGURATION OPTIONS

CONFIGURATION	DESCRIPTION
A	1 - 4" OUTLET; 1 - 2.5 " OUTLET
B	1 - 4" OUTLET; 2 - 2.5 " OUTLETS
C	2 - 4" OUTLET; 1 - 2.5 " OUTLET
D	1 - 4" OUTLET; 2 - 2.5 " OUTLETS (DRY BARREL)

WHEN OVERHEAD POWER EXCEEDS 600 VOLTS.

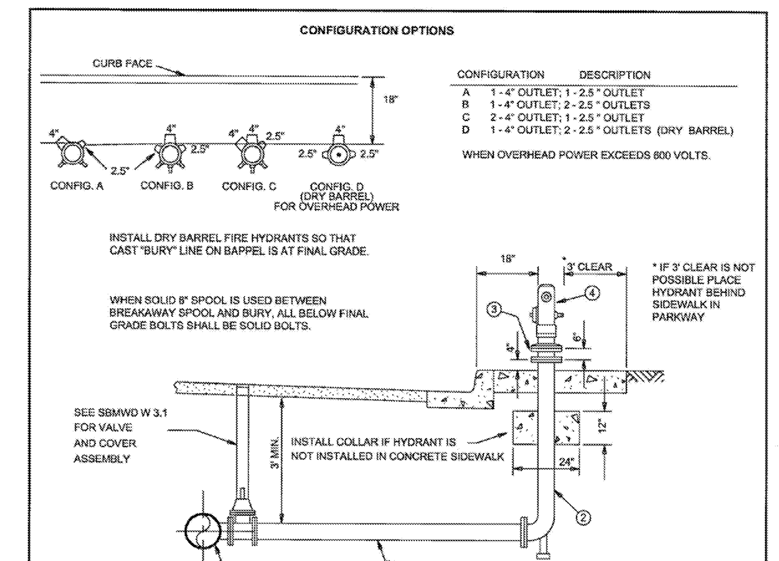

ITEM	QTY	DESCRIPTION
1	___LF	6" CLASS 350 DUCTILE IRON PIPE RESTRAINED WITH MEGALUG OR APPROVED EQUAL
2	1 EA	___" x 6" (6 HOLE) FIRE HYDRANT BURY WITH RESTRAINED MJ INLET AND FLANGE OUTLET, PAINT EXPOSED PORTION TO MATCH FIRE HYDRANT
3	1 EA	6" (6 HOLE) FLANGED BREAKAWAY EXTENSION SPOOL. MORTAR LINED AND PAINTED TO MATCH FIRE HYDRANT. ALL ABOVE-GRADE BOLTS SHALL BE HOLLOW BREAKAWAY BOLTS. INSTALL BOLT HEADS UP AND NUTS DOWN.
4	1 EA	A SBMWD APPROVED HYDRANT (SELECT THE APPROPRIATE CONFIGURATION)
5	1 EA	USE WELD NOZZLE OR TAPPING SLEEVE ON EXISTING MAINS. USE TEE WITH RESTRAINED BRANCH AND RUN ON NEW SYSTEMS.

NOTE: INSTALL BLUE DOT PAVEMENT MARKERS PER SBMWD STD. W 8.3

M.H.L	FEB. 04	
R.L.L	SEP. 01	
S.W.L	NOV. 97	
S.W.L	AUG. 97	
REVISION	DATE	

SAN BERNARDINO MUNICIPAL WATER DEPARTMENT
6" FIRE HYDRANT INSTALLATION
APPROVED MATTHEW H. LITCHFIELD RCE 58079 DATE 8-25-04
SCALE: NONE
DRAWING NUMBER SBMWD W2.2

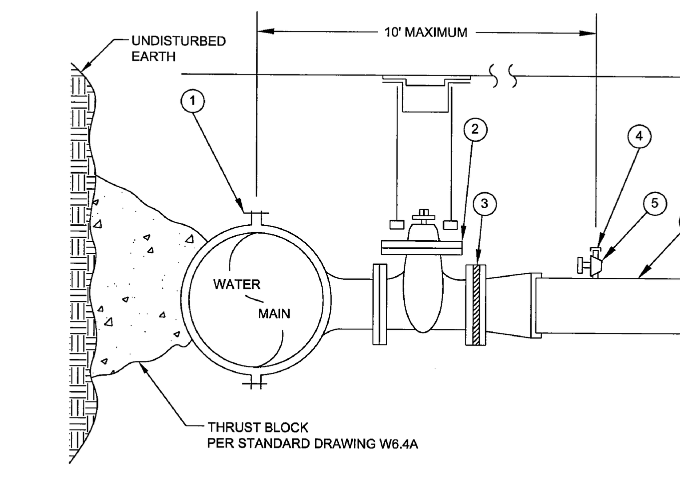

ITEM	QTY	DESCRIPTION
1	1 EA	______" EPOXY COATED TAPPING SADDLE (____" O.D. x __" FLG) OR ______" FABRICATED TAPPING SADDLE (____" O.D. x __" FLG) OR ______" FABRICATED WELD NOZZLE (____" O.D. x __" FLG)
2	1 EA	___" FLG GATE VALVE PER SBMWD STD. W 3.1
3	1 EA	___" TEST PLATE
4	1 EA	1" CHLORINATION AND FLUSHING PORT PER STANDARD DRAWING W6.7 (INSTALL WHEN LATERAL IS LONGER THAN 10')
5	1 EA	___" FLANGE X MJ ADAPTOR (RESTRAIN WITH "MEGALUG" RESTRAINT)
6	_LF	___" CLASS 350 DUCTILE IRON PIPE, RESTRAINED W/ MEGALUG OR APPROVED EQUAL.

M.H.L.	FEB. 04	
REVISION	DATE	

SAN BERNARDINO MUNICIPAL WATER DEPARTMENT
TAPPING DETAIL FOR 4" AND LARGER CONTRACTOR-INSTALLED MAINS
APPROVED MATTHEW H. LITCHFIELD RCE 58079 DATE 8-25-04
SCALE: NONE
DRAWING NUMBER SBMWD W3.5

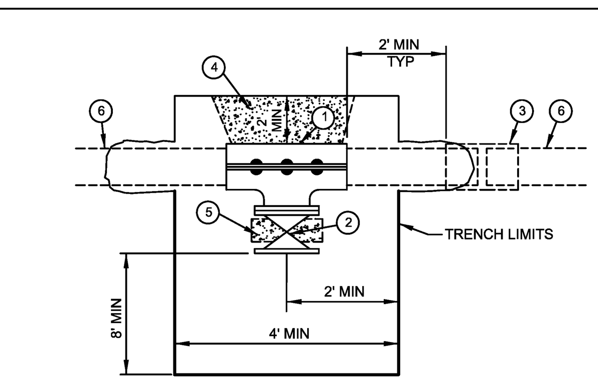

ITEM	DESCRIPTION
1	TAPPING SLEEVE OR WELD ON NOZZLE - SEE SPECIFICATIONS
2	TAPPING VALVE, SEE STANDARD DRAWING W3.1
3	EXISTING COUPLING, COLLAR OR PIPE JOINT
4	CONCRETE THRUST BLOCK, IF REQUIRED. SEE STANDARD DRAWING W6.4 A
5	SUPPORT VALVE AS REQUIRED, SEE STANDARD DRAWING W3.1
6	EXISTING PIPE, VERIFY MATERIAL TYPE, OUTSIDE DIAMETER, AND POTENTIAL CONFLICTS

NOTES
1. CLEARANCE FROM A COLLAR OR PIPE JOINT SHALL BE A MINIMUM OF 2 FEET FROM THE EDGE OF TAPPING SLEEVE TO COLLAR OR PIPE JOINT. THE EXISTING PIPE SHALL BE EXPOSED SUFFICIENTLY TO ENSURE THAT SUCH MINIMUM CLEARANCE IS PROVIDED.
2. TRENCH SHALL MEET ALL CAL OSHA REQUIREMENTS.
3. GATE VALVE TO BE TEMPORARILY SUPPORTED DURING THE HOT TAP PROCESS.

M.H.L.	FEB. 04	
REVISION	DATE	

SAN BERNARDINO MUNICIPAL WATER DEPARTMENT
EXCAVATION FOR HOT TAPS
APPROVED ____ DATE ____ MATTHEW H. LITCHFIELD RCE 58079
SCALE: NONE
DRAWING NUMBER SBMWD W3.7

E0901510

Underground Service Alert
Call: TOLL FREE 1-800 227-2600
CALL BEFORE YOU DIG
TWO WORKING DAYS BEFORE YOU DIG

MARK	REVISIONS	BY	APPR.	DATE

BENCHMARK = CITY OF SAN BERNARDINO BM# G1-41.
ELEVATION 1158.763 FT.

BRASS DISK CSB G1-41. 41.25 FT. EAST & 30.0 FT SOUTH OF THE CENTERLINE P.I. OF MT. VERNON & 14TH ST. ;9.75 FT. SOUTH OF THE SOUTH CURBLINE OF 14TH ST. 9.25 FT. EAST OF THE EAST CURBLINE OF MT.VERNON AVE. ' 2.0 FT EAST OF THE NORTH/SOUTH SIDEWALK ABOUT 0.2 FEET LOWER THEN THE PAVEMENT.

Fraco Enterprises Inc
Engineering and Construction Services
12139 MOUNT VERNON AVENUE, SUITE 210
GRAND TERRACE, CA 92313
TEL (909) 824-7230 FAX (909) 824-7385

REGISTERED PROFESSIONAL ENGINEER · MARIA I. FRASER · No. 56005 · EXP. DATE 12/31/12 · CIVIL · STATE OF CALIFORNIA

PREPARED UNDER THE DIRECT SUPERVISION OF:
MARIA I. FRASER
RCE NO. 56005
EXP. 12/31/2012
DATE

DESIGNED BY: JRN, SM
DRAWN BY: JRN, SM
CHECKED BY: MIF

CITY OF SAN BERNARDINO
DEPARTMENT OF PUBLIC WORKS
APPROVED BY:
ROBERT G. EISENBEISZ, P.E. — DATE
CITY ENGINEER
RCE NO. 54931, EXP. 6/30/2012

CITY OF SAN BERNARDINO
DEVELOPMENT SERVICES~PUBLIC WORKS/ENGINEERING

UTILITY PLAN-SEWER AND WATER
ROSEVELT II ELEMENTARY SCHOOL

STANDARDS AND DETAILS SHEET

DRAWING NO. 12343
SHEET U-4 OF 5 SHEETS
FOR CITY USE ONLY: FILE NO. W.O. NO.

RE-BID #F09-02 ROOSEVELT II (HENRY) E.S. NEW CONSTRUCTION BID ISSUANCE SET 12/09/11