Administration Building

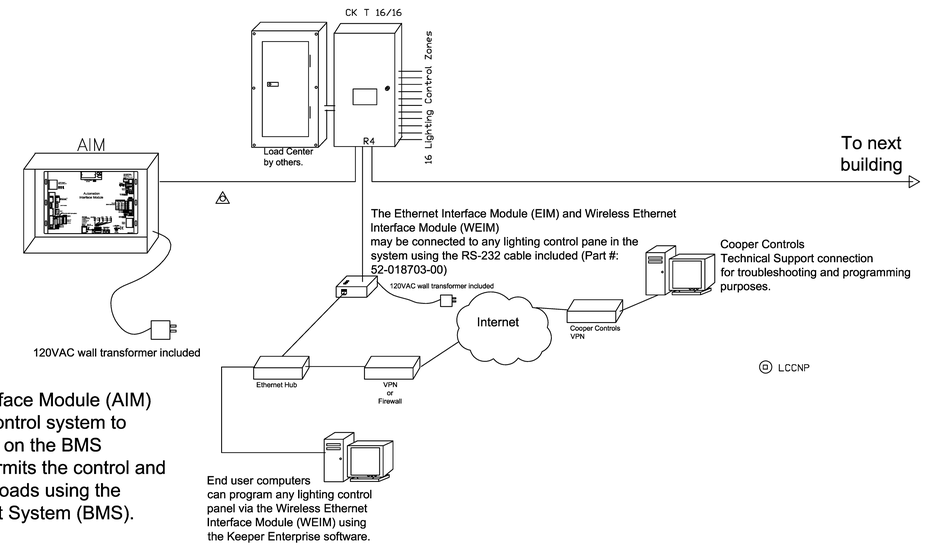

Available protocols:
BACnet/IP
BACnet/ Ethernet
BACnet MS/TP
Metasys N2 Open Protocol
Modbus RTU
Modbus ASCII
LonTalk Protocol
(BMS provided by others)

The Automation Interface Module (AIM) permits the lighting control system to communicate directly on the BMS network. This will permits the control and status of the lighting loads using the Building Management System (BMS).

Typical (8) room classroom building with skylight control

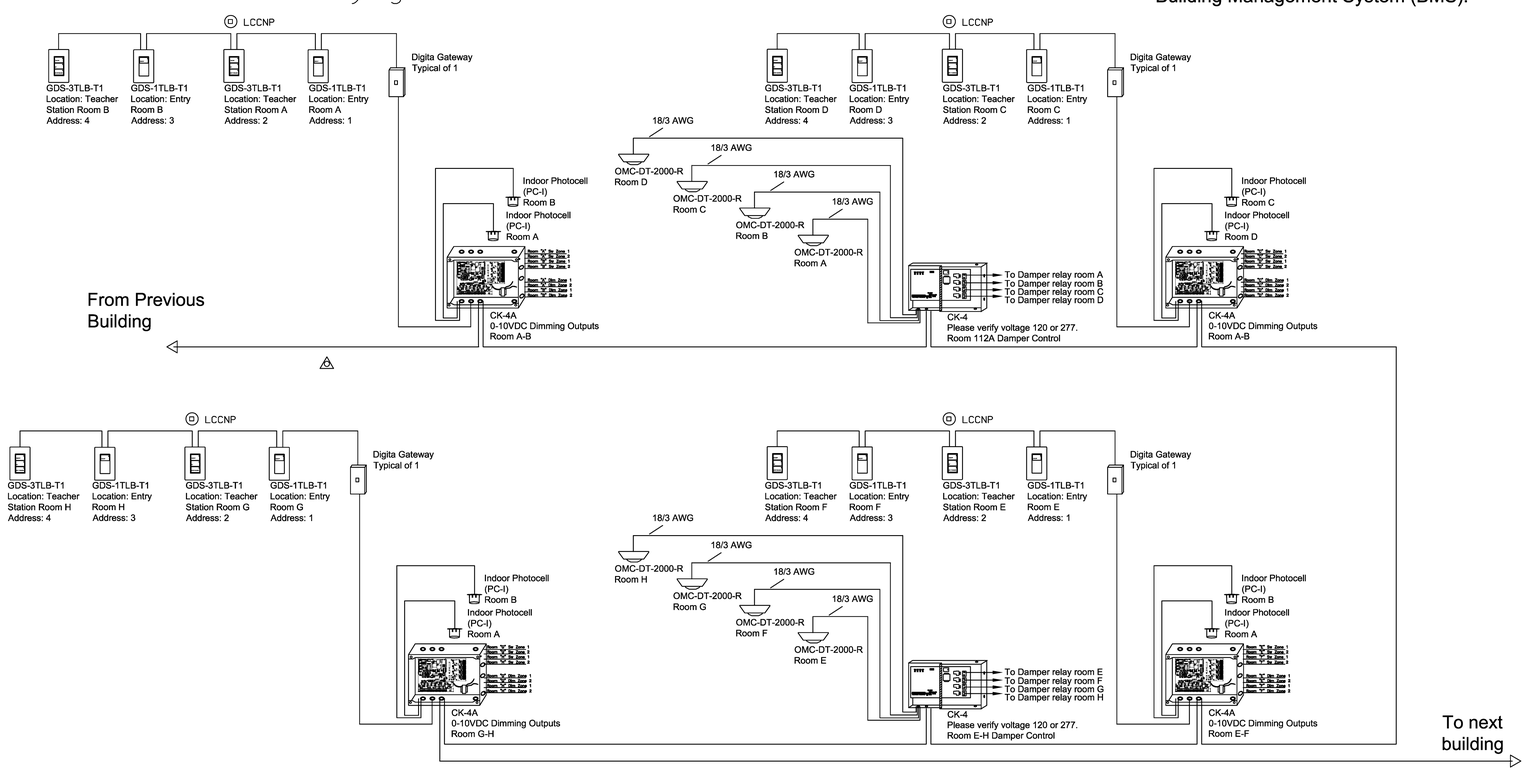

Notes:

1.) 32 Momentary switch terminations are provided with each ControlKeeper TouchScreen logic
\pt0.24; board. 4 Momentary switch terminations are provided with each ControlKeeper 4 and 4A. (use 18/3 for LV wiring)
\ptz;2.) Indoor photocell should be mounted to avoid light contribution from fixtures
(use 18/3 for photocell wiring)
\pt0.24;3.) The Digital switch network length cannot exceed 1000 feet. The maximum drop length off the main BUS
cannot exceed 29.5 feet. 1 Digita Gateway may be placed on any Digital switch network. Make certain that the ends of the BUS network are properly terminated. (use Cooper LCCNP or Beldon 1502 for Digital switch wiring)
4.) The RS-485 network wire is not to exceed 4000 feet. (use Belden #9841 or CAT 5 for RS-485 network wiring)
5.) The Building IT personnel are required for setup of the Ethernet Interface Module (EIM). The EIM can be located anywhere on the lighting control network. The EIM provides a connection from the lighting control network to the building LAN. A VPN connection is available for added LAN security.
6.) This one-line drawing is for concept only. Do not wire the system per this one-line. Refer to plans for location, size, and quantity. Refer to the Installation Instructions for correct wiring information.
\ptz;7.) Cooper Controls provides a 3 year warranty on all logic boards.
8.) Cooper Controls provides a 10 year warranty on all relay cards

Cable Notes:

RS-485 Network
Belden #9841 or CAT 5 recommended

RS-232 Cable (6 Feet)
Provided by PCI Lighting Control Systems

Digital Switch Cable
Use LCCNP Non-plenum cable or Belden 1502R cable. For more information, please see Digita wiring details in this submittal.

LAN Cable
Use certified CAT 5 cable for TCP/IP communications

Low Voltage Switch Wire
18/3 AWG

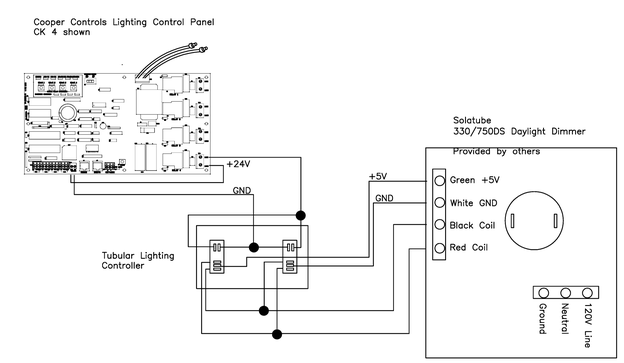

Sequence of Operations:
When the Relay in the Lighting Control Panel is closed a signal is sent to close the Solatube motor.
When the Relay in the Lighting Control Panel is open a signal is sent to open the Solatube motore.

Title: Solatube Daylight Dimmer Controller
Application: Solatube Open/Close

LICENSED ARCHITECT JAMES M. STUCKY C19098 RENEWAL 02/28/ STATE OF CALIFORNIA

REGISTERED PROFESSIONAL ENGINEER STEPHEN R. SAYLES No. E 10272 Exp. 09-30-13 ELECTRICAL STATE OF CALIFORNIA

FBA Engineering
Consulting Electrical Engineers
3420 Tyler Avenue, Suite 202
El Monte, California 91731
TEL: 626 448 6600 FAX: 626 685 1287
EMAIL: fba@fbaengineering.net
FBA # 270.082

REVISIONS	DATE
-	-
-	-
-	-
-	-
-	-
-	-

P S W C GROUP
ARCHITECTS / PLANNERS
1887 BUSINESS CENTER DR., SUITE 3, SAN BERNARDINO, CA. 92408
909/890-2233 FAX. 909/890-2844

ROOSEVELT II
ELEMENTARY SCHOOL
SAN BERNARDINO CITY UNIFIED SCHOOL DISTRICT
1261 W. 16TH STREET, SAN BERERNARDINO, CA.

LIGHTING RISER DIAGRAM

JOB NO. P520
DRAWN BY FBA
DATE 12/9/2011

E-1.8

Filename: S:\DRAWINGS\E-1 Date: Dec 09, 2011 Time: 9:11 AM
Drawn: TIMLEACH

RE-BID #F09-02 ROOSEVELT II (HENRY) E.S. NEW CONSTRUCTION BID ISSUANCE SET 12/09/11