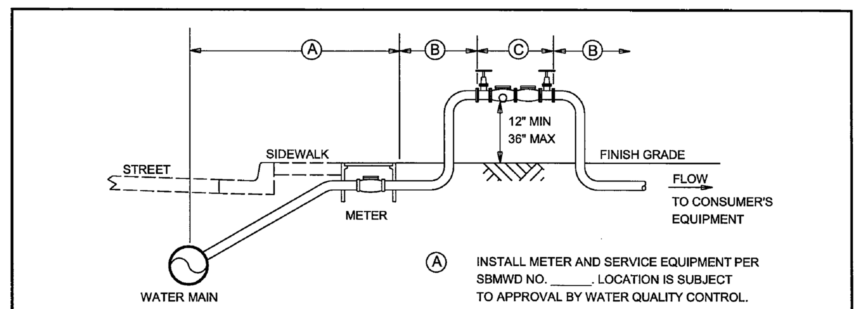

(A) INSTALL METER AND SERVICE EQUIPMENT PER SBMWD NO. ______. LOCATION IS SUBJECT TO APPROVAL BY WATER QUALITY CONTROL.

(B) INSTALLED AND MAINTAINED BY CONSUMER PER CITY OF SAN BERNARDINO BUILDING AND SAFETY SPECIFICATIONS.

(C) APPROVED REDUCED PRESSURE PRINCIPLE BACKFLOW PREVENTION ASSEMBLY WITH RESILIENT SEATED SHUT-OFF VALVES.

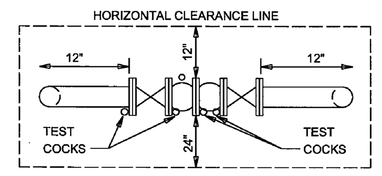

NOTES

1 THE ASSEMBLY MUST BE INSPECTED AND APPROVED BY SBMWD IMMEDIATELY AFTER INSTALLATION. THE ASSEMBLY MUST BE TESTED BY A CERTIFIED BACKFLOW TESTER, ISSUED BY THE ADMINISTRATIVE AUTHORITY HAVING JURISTICTION.

2 NO CONNECTIONS OR TEES ARE PERMITTED BETWEEN THE METER AND BACKFLOW PREVENTER. STRAINERS WILL BE REVIEWED ON AN INDIVIDUAL BASIS.

3 PRIOR TO INSTALLATION OF THE ASSEMBLY, THE WATER SERVICE SHALL BE FLUSHED

4 A MANIFOLD CONNECTION WITH DUPLEX UNITS SHOULD BE INSTALLED IF AN UNINTERRUPTED SUPPLY OF WATER IS NECESSARY

5 A PRESSURE RELIEF VALVE SHALL BE INSTALLED PER SEC. 1007 OF THE UNIFORM PLUMBING CODE

SAN BERNARDINO MUNICIPAL WATER DEPARTMENT		DRAWING NUMBER
TYPICAL INSTALLATION OF REDUCED PRESSURE PRINCIPLE BACKFLOW PREVENTION ASSEMBLY		SBMWD W4.1
M.H.L.	FEB. 04	
REVISION	DATE	
SCALE: NONE	APPROVED MATTHEW H. LITCHFIELD RCE 58079 DATE 8-25-04	

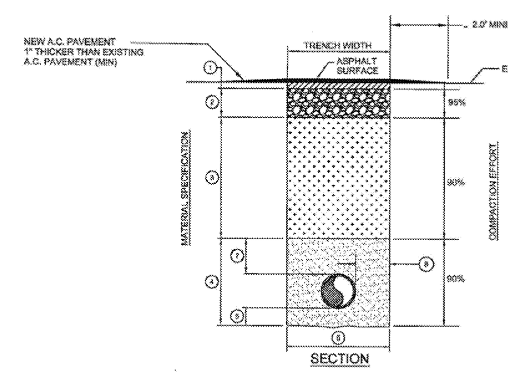

GENERAL RIGHT-OF-WAY TRENCH NOTES:

(1) ASPHALT PATCH 3 INCHES MINIMUM OR MATCH THE EXISTING SECTION, WHICHEVER IS GREATER. ASPHALT PATCH MAY BE ELIMINATED OUTSIDE THE ROADWAY PRISM.
(2) ROAD BASE: CRUSHED ASPHALT AGGREGATE BASE (SECTION 200-2.2) 7 INCHES OR MATCH EXISTING SECTION, WHICHEVER IS GREATER, 95% DENSITY, PLACED IN 4 INCH LIFTS.
(3) TRENCH BACKFILL: SELECT BACKFILL, 90% DENSITY, PLACED IN 8 INCH LIFTS. IF TRENCH IS LOCATED OUTSIDE THE ROADWAY PRISM, SELECT BACKFILL MAY BE PLACED TO FINISH GRADE.
(4) PIPE ZONE: SAND (SE 30), JETTED, PER SECTION 306-1.3 (GREEN BOOK), OR PLACED MECHANICALLY TO 90% DENSITY. PIPE ZONE SHALL CONSIST OF A 2-SACK 300 PSI (±) CONTROLLED LOW STRENGTH MATERIAL AS SPECIFIED IN SECTION 201-6 OF THE GREEN BOOK AT LOCATIONS SHOWN ON THE TABLE BELOW.

CLSM LIMITS - PIPE ZONE

FROM PIPE STATION	TO PIPE STATION
X+XX.XX	X+XX.XX

(5) FOUNDATION FILL: THE FILL MATERIAL SHALL BE THE SAME AS THE PIPE ZONE MATERIAL AROUND THE PIPE. A MINIMUM OF 6 INCHES OF FOUNDATION FILL IS REQUIRED, 90% DENSITY, JETTED PER SECTION 306-1.3 (GREEN BOOK) OR PLACED MECHANICALLY.
(6) MINIMUM TRENCH WIDTH SHALL BE THE PIPE DIAMETER PLUS 2 FEET FOR ALL PIPE DIAMETERS. PIPE SHALL BE CENTERED IN THE TRENCH. TRENCH WIDTHS SHALL ALLOW PLACEMENT AND COMPACTION OF BACKFILL MATERIAL.
(7) 12 INCHES OF SAND (SE 30) BACKFILL COVER SHALL BE USED.
(8) MAXIMUM DISTANCE BETWEEN PIPE WALL AND TRENCH WALL SHALL BE 12".
(9) DURING CONSTRUCTION 30" MINIMUM COVER MUST BE MAINTAINED FROM TOP OF PIPE TO GRADE.
(10) MINIMUM COVER IS REFERENCED TO FUTURE FINISHED FINAL GRADES UNLESS OTHERWISE SHOWN ON PROFILE DRAWINGS.
(11) SUPPORT PIPE WITH SANDBAGS AND SPOT LOAD PIPE AS REQUIRED DURING INSTALLATION OF CLSM IN PIPE ZONE AND PIPE BEDDING AREAS.
(12) DIAGONAL PAVEMENT REPLACEMENT IS NOT PERMITTED

* OR AS DIRECTED BY THE ENGINEER-SEE CITY STD. DWG. NO. 310

SAN BERNARDINO MUNICIPAL WATER DEPARTMENT		DRAWING NUMBER
TRENCH, BACKFILL & PAVEMENT REPLACEMENT DETAIL		SBMWD W5.1 1 OF 2
M.J.N.	FEB. 04	
REVISION	DATE	
SCALE: NONE	APPROVED MATTHEW H. LITCHFIELD RCE 58079 DATE 8-25-04	

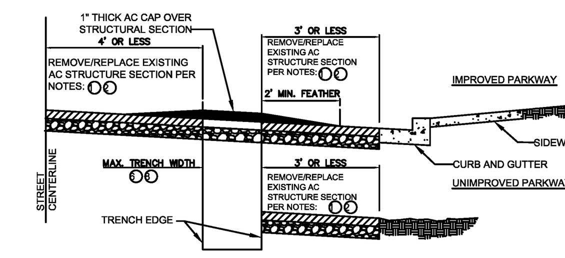

GENERAL RIGHT-OF-WAY TRENCH NOTES:

(1) ASPHALT PATCH 3 INCHES MINIMUM OR MATCH THE EXISTING SECTION, WHICHEVER IS GREATER. ASPHALT PATCH MAY BE ELIMINATED OUTSIDE THE ROADWAY PRISM.
(2) ROAD BASE: CRUSHED ASPHALT AGGREGATE BASE (SECTION 200-2.2) 7 INCHES OR MATCH EXISTING SECTION, WHICHEVER IS GREATER, 95% DENSITY, PLACED IN 4 INCH LIFTS.
(6) MINIMUM TRENCH WIDTH SHALL BE THE PIPE DIAMETER PLUS 2 FEET FOR ALL PIPE DIAMETERS. PIPE SHALL BE CENTERED IN THE TRENCH. TRENCH WIDTHS SHALL ALLOW PLACEMENT AND COMPACTION OF BACKFILL MATERIAL.
(8) MAXIMUM DISTANCE BETWEEN PIPE WALL AND TRENCH WALL SHALL BE 12".
(12) DIAGONAL PAVEMENT REPLACEMENT IS NOT PERMITTED

* OR AS DIRECTED BY THE ENGINEER-SEE CITY STD. DWG. NO. 310

APPROVED BY:

CITY ENGINEER DATE

SAN BERNARDINO MUNICIPAL WATER DEPARTMENT		DRAWING NUMBER
TRENCH, BACKFILL & PAVEMENT REPLACEMENT DETAIL PARALLEL TO TRAFFIC		SBMWD W5.1 2 OF 2
M.J.N.	FEB. 04	
REVISION	DATE	
SCALE: NONE	APPROVED MATTHEW H. LITCHFIELD RCE 58079 DATE	

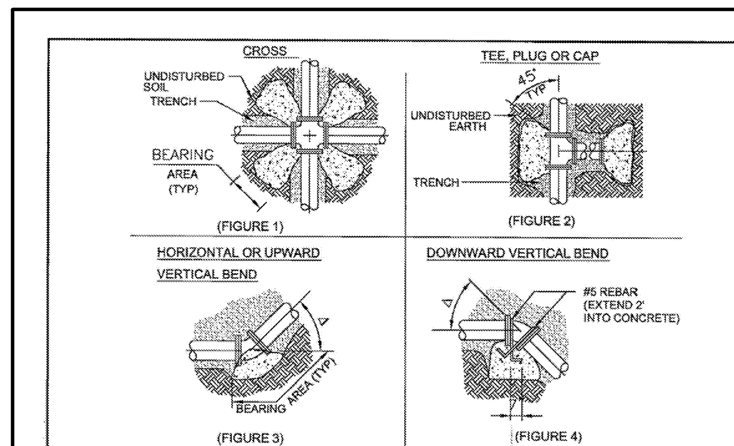

GENERAL NOTES:

ALL CONCRETE SHALL BE 3000 PSI MINIMUM, 28 DAYS COMPRESSIVE STRENGTH. CONCRETE IS TO BE PLACED AGAINST UNDISTURBED EARTH. TABLE BELOW DENOTES MINIMUM BEARING AREA OR VOLUME OF THRUST BLOCK. SPECIAL DESIGN CALCULATIONS ARE TO BE SUBMITTED TO SBMWD FOR APPROVAL IF ALLOWABLE SOIL BEARING CAPACITY IS LESS THAN 3000 PSF. ALL VERTICAL SURFACES NOT BEARING AGAINST UNDISTURBED EARTH SHALL BE FORMED. ALL THRUST BLOCKS SHALL BE PLACED IN THE PRESENCE OF AN SBMWD INSPECTOR.

	BEARING AREA IN SQ FT						CONC/CU YDS		
PIPE ID	FIGURE	FIGURE	FIGURE 3, △				FIGURE 4, △		
	1	2	90°	45°	22½°	11¼°	45°	22½°	11¼°
4"	2	2	2	2	1	1	1.0	0.5	0.5
6"	2	3	4	2	1	1	1.5	1.0	0.5
8"	3	5	7	4	2	1	3.0	1.5	1.0
10"	4	8	11	6	3	2	4.0	2.5	1.5
12"	6	11	15	8	4	2	6.0	3.0	1.5
16"	10	20	28	15	8	4	10.5	6.0	3.0
18"	13	25	35	19	10	5	13.5	7.5	3.5
20"	16	31	44	24	12	6	16.0	9.0	4.5
24"	22	44	63	34	17	9	23.5	12.5	6.5

NOTE:
USE OF THRUST BLOCKS REQUIRES PRIOR DEPARTMENT APPROVAL AND WILL BE EVALUATED ON A CASE BY CASE BASIS.

SAN BERNARDINO MUNICIPAL WATER DEPARTMENT		DRAWING NUMBER
THRUST BLOCK INSTALLATION		SBMWD W6.4 A
M.H.L.	FEB. 04	
REVISION	DATE	
SCALE: NONE	APPROVED MATTHEW H. LITCHFIELD RCE 58079 DATE 8-25-04	

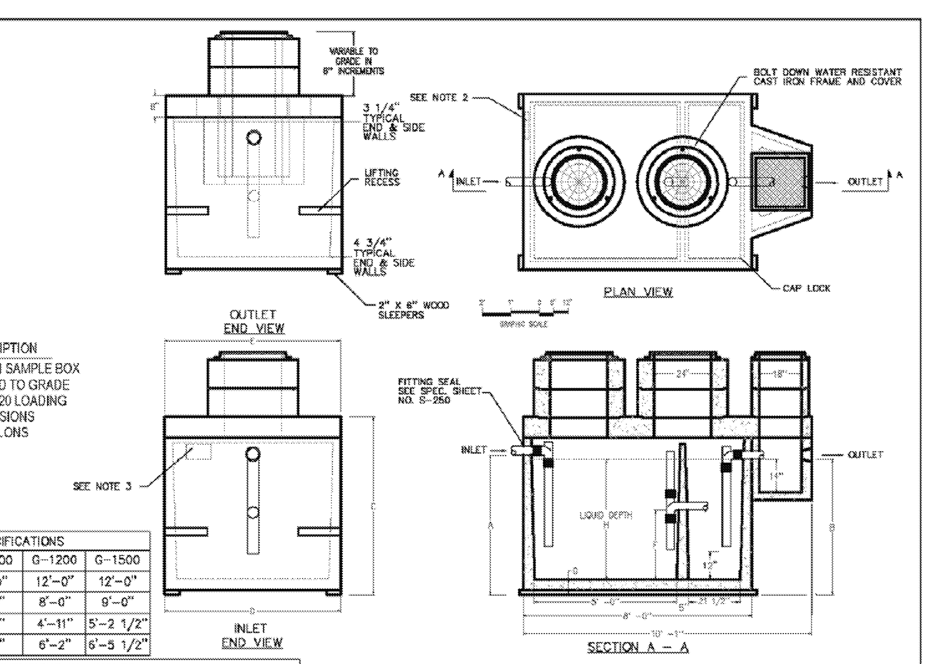

APPLICATION DESCRIPTION
GREASE INTERCEPTOR WITH SAMPLE BOX
TWO MANHOLES EXTENDED TO GRADE
DESIGNED FOR DIRECT H-20 LOADING
OF MANHOLE EXTENSIONS
750 THRU 1500 GALLONS

EXCAVATION SPECIFICATIONS				
MODEL	G-750	G-1000	G-1200	G-1500
LENGTH	12'-0"	12'-0"	12'-0"	12'-0"
WIDTH	8'-0"	8'-0"	8'-0"	9'-0"
BELOW INLET	3'-4"	4'-2"	4'-11"	5'-2 1/2"
TANK HEIGHT	4'-7"	5'-5"	6'-2"	6'-5 1/2"

ALL DIMENSIONS IN INCHES								
MODEL	A	B	C	D	E	F	G	H
PC G-750	40	38	55	74	74	19 3/4	4 1/2	31 1/2
PC G-1000	50	48	65	74	74	24 3/4	4 1/2	41 1/2
PC G-1200	59	57	74	74	74	29 1/4	4 1/2	50 1/2
PC G-1500	62 1/2	60 1/2	77 1/2	85	85	30 3/4	5	53 1/2

NOTES:
1. REFER TO SPECIFICATIONS SHEET NO. S-212
2. REFER TO SPECIFICATIONS SHEET NO. S-252
3. REFER TO SPECIFICATIONS SHEET NO. S-251

FOR SPECIFICATIONS:
LINK to "specs.ProcastProducts.com"
This drawing is for reference purposes only.
Complete drawings are available by request.
WWW.PROCASTPRODUCTS.COM

PRO-CAST PRODUCTS INC.

GREASE INTERCEPTOR
Drawn: CML | ID: 8044.DWG
Rev. 1 | Date: 06/13/07 | PAGE 1 OF 1

E0901510

Underground Service Alert
Call: TOLL FREE
1-800
227-2600
CALL BEFORE YOU DIG
TWO WORKING DAYS BEFORE YOU DIG

MARK	REVISIONS	BY	APPR.	DATE

BENCHMARK = CITY OF SAN BERNARDINO BM# G1-41.
ELEVATION 1158.763 FT.

BRASS DISK CSB G1-41. 41.25 FT. EAST & 30.0 FT SOUTH OF THE CENTERLINE P.I. OF MT. VERNON & 14TH ST. ;9.75 FT. SOUTH OF THE SOUTH CURBLINE OF 14TH ST. 9.25 FT. EAST OF THE EAST CURBLINE OF MT.VERNON AVE. ' 2.0 FT EAST OF THE NORTH/SOUTH SIDEWALK ABOUT 0.2 FEET LOWER THEN THE PAVEMENT.

Fraco Enterprises Inc
Engineering and Construction Services
12139 MOUNT VERNON AVENUE, SUITE 210
GRAND TERRACE, CA 92313
TEL (909) 824-7230 FAX (909) 824-7385

REGISTERED PROFESSIONAL ENGINEER
MARIA I. FRASER
No. 56005
EXP. DATE 12/31/12
CIVIL
STATE OF CALIFORNIA

PREPARED UNDER THE DIRECT SUPERVISION OF:

MARIA I. FRASER DATE
RCE NO. 56005
EXP. 12/31/2012

DESIGNED BY: JRN, SM
DRAWN BY: JRN, SM
CHECKED BY: MIF

CITY OF SAN BERNARDINO
DEPARTMENT OF PUBLIC WORKS

APPROVED BY:

ROBERT G. EISENBEISZ, P.E. DATE
CITY ENGINEER
RCE NO. 54931, EXP. 6/30/2012

CITY OF SAN BERNARDINO
DEVELOPMENT SERVICES~PUBLIC WORKS/ENGINEERING

UTILITY PLAN-SEWER AND WATER
DR. MILDRED D. HENRY ELEMENTARY SCHOOL
(A.K.A RII)
STANDARDS AND DETAILS SHEET

DRAWING NO. 12343

SHEET U-5 OF 5 SHEETS

FOR CITY USE ONLY: FILE NO. W.O. NO.

RE-BID #F09-02 ROOSEVELT II (HENRY) E.S. NEW CONSTRUCTION BID ISSUANCE SET 12/09/11