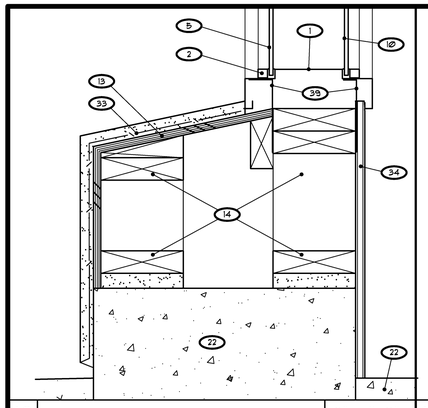

19 SILL 3" = 1'-0"

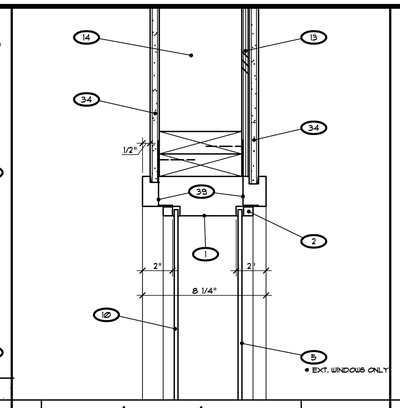

15 HEAD / JAMB / SILL 3"=1'-0"

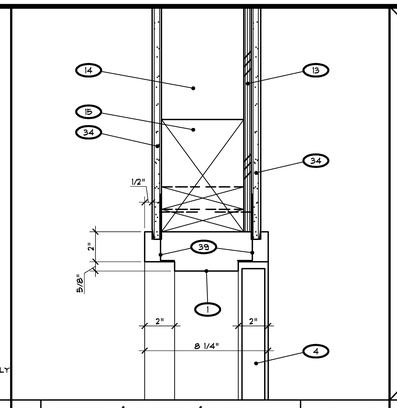

11 HEAD / JAMB / SILL 3"=1'-0"

7 NOT USED

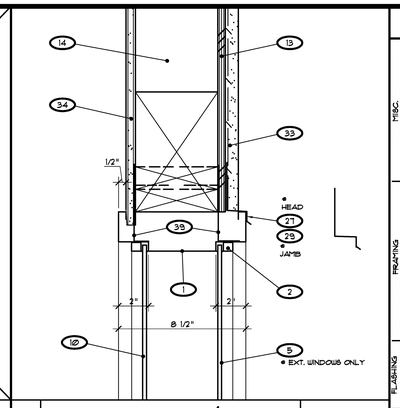

3 EXTERIOR HEAD / JAMB 3"=1'-0"

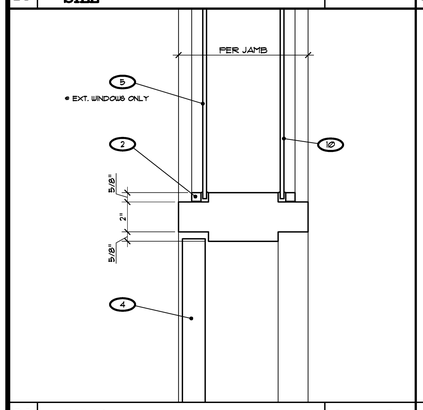

20 JAMB 3" = 1'-0"

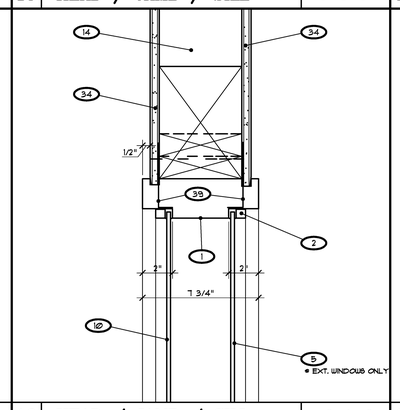

16 HEAD / JAMB / SILL 3"=1'-0"

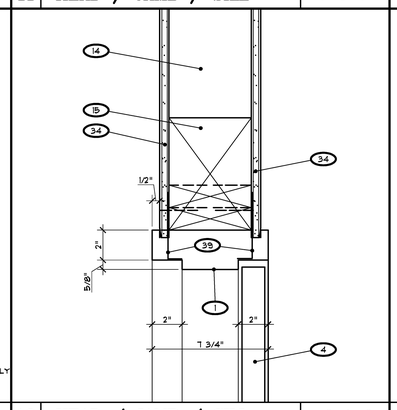

12 HEAD / JAMB / SILL 3"=1'-0"

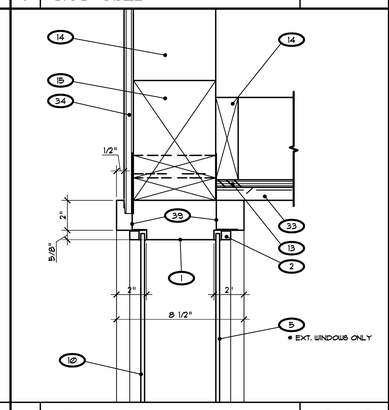

8 HEAD 3"=1'-0"

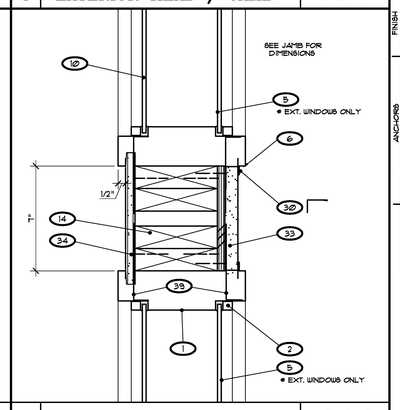

4 EXTERIOR JAMB 3"=1'-0"

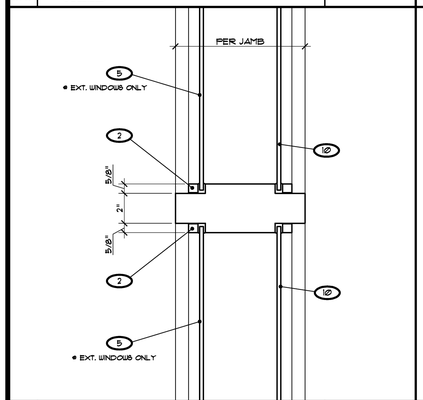

21 JAMB 3" = 1'-0"

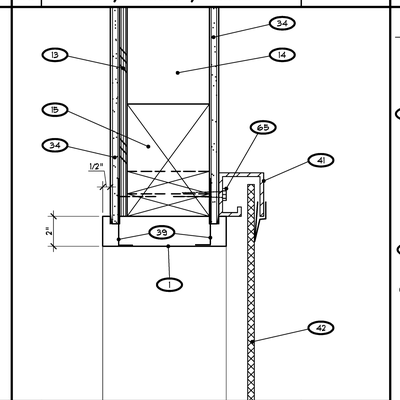

17 INTERIOR JAMB 3"=1'-0"

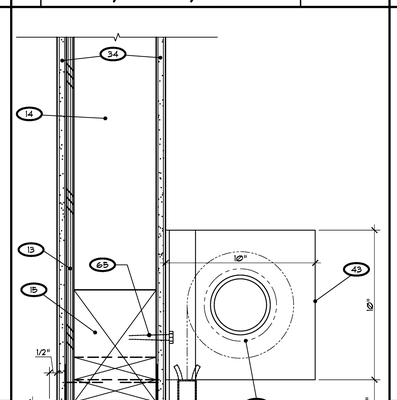

14 INTERIOR HEAD N.T.S.

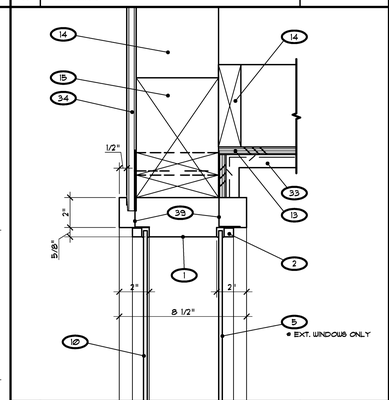

9 HEAD 3"=1'-0"

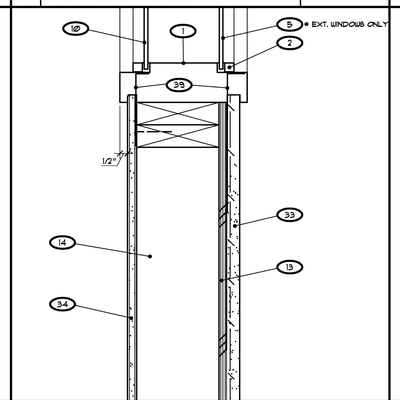

5 EXTERIOR SILL 3"=1'-0"

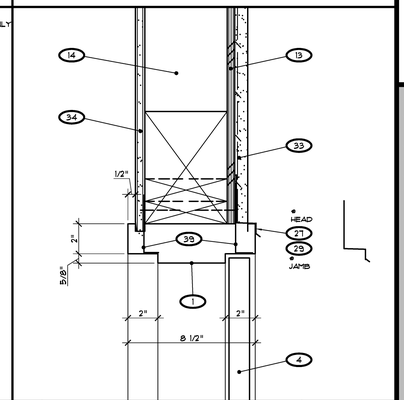

1 EXTERIOR HEAD / JAMB 3"=1'-0"

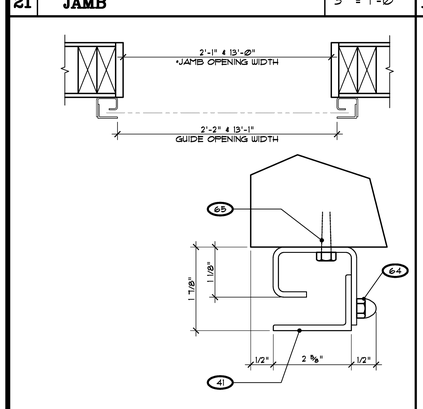

22 DOOR GUIDE ATTACHMENT N.T.S.

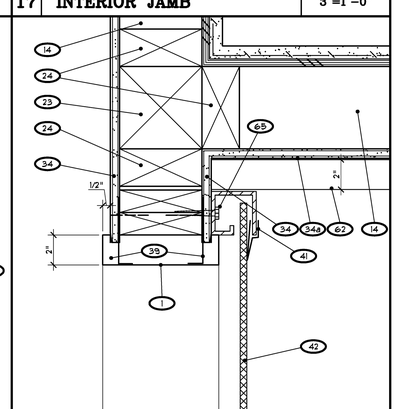

18 INTERIOR JAMB 3"=1'-0"

NOTES:
1. GENERAL SPECIFICATIONS SEE SHEET 1.

2. APPROX. WT. OF DOOR FOR OPENING #8 IS 642 LBS. AND 187 LBS. FOR OPENING #10.

3. THE COOKSON COMPANY ASSUMES THAT THE FIRE DOOR(S), THE WALL AND/OR MOUNTING CONDITIONS ALONG WITH THE FASTENERS USED IN ATTACHING THE DOOR(S) TO THE STRUCTURE MEET WITH THE "AUTHORITY HAVING JURISDICTION'S" APPROVAL. FOR FURTHER REFERENCE CONSULT N.F.P.A. BULLETIN 80.

4. PROVIDE ADEQUATE CLEARANCE FOR WIRING MOTOR.

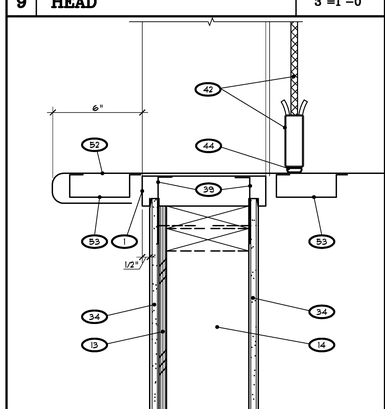

10 INTERIOR SILL 3"=1'-0"

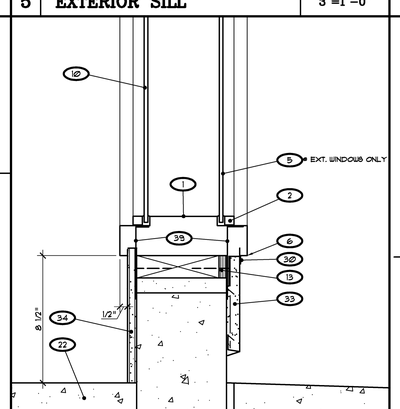

6 EXTERIOR SILL 3"=1'-0"

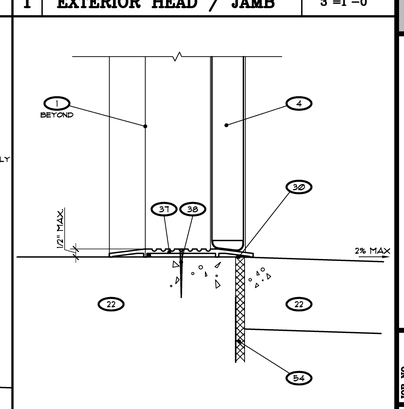

2 THRESHOLD 3"=1'-0"

LEGEND

	1	HOLLOW METAL FRAME (1A) SET IN MASTIC
	2	5/8" x 5/8" GLAZING STOP TUBE SET IN MASTIC
	3	ALUMINUM THRESHOLD
	4	DOOR SEE SCHEDULE
	5	1/4" POLYCARBONITE SHEET
MISC.	6	CONT. CAULKING / SEALANT (6A) FIRE CAULKING
	7	BACKER ROD
	8	3/8" PLYWOOD
	9	PLASTIC LAMINATE COUNTER TOP
	10	1/4" TEMPERED GLAZING
	11	
	12	3/4" PLYWOOD
	13	1/2" PLYWOOD SHEATHING PER STRUCTURAL
	14	2x FRAMING PER STRUCTURAL
	15	6x HEADER PER STRUCTURAL
	16	WOOD FURRING AS DETAILED
	17	2 x 4 CONT. SHAPED WHERE SHOWN
FRAMING	18	2 x 6 CONT. " " "
	19	2 x 8 CONT. " " "
	20	2 x 10 CONT. " " "
	21	2 x 12 CONT. " " "
	22	CONCRETE FOUNDATION
	23	6x POST
	24	3x FRAMING
	25	WOOD SHIM
	26	2x4 WOOD FURRING (26A) 1 3/8" WOOD FURRING
	27	24 GA. G.I. DRIP FLASHING (PAINTED)
	28	24 GA. G.I. FLASHING (PAINTED)
	29	"J" MOULDING
FLASHING	30	24 GA. G.I. PLASTER STOP (PAINTED)
	31	SHAPED WOOD AS DETAILED
	32	1" RAD. CORNER AID
	33	7/8" EXTERIOR PLASTER OVER METAL LATH
	34	5/8" GYPSUM BOARD TYPE "X" WHERE OCCURS
FINISH	34a	FRP O/ 5/8" GYPSUM BOARD TYPE "X" WHERE OCCURS
	35	2 LAYERS 5/8" TYPE "X" GYPSUM BOARD
	36	TILE (36A) 1/4" ROUND TILE
	37	THRESHOLD (SEE HARDWARE SPEC.)
	38	#4 U.S. @ 2'-0" O.C. MIN. 1-1/2" PENETRATION
	39	2"x16 GA. STRAPS @24" O.C. W/(2) 8d STRONG TIE NAILS
	40	3/8" RDx4½" F.H.S. W/ ⅜"RD. WEDGE ANCH. @24"
	41	ROLL-UP DOOR GUIDE RAIL PER MFR.
	42	ROLL-UP DOOR PER MFR.
	43	ROLL-UP DOOR HOUSING PER MFR.
	44	ROLL-DN. DOOR SAFETY SEAL PER MFR.
	45	¼"x10" LONG STEEL THRESHOLD
	46	3/8" RDx 6" F.H.W.S. @ 24" O.C.
	47	2x BLOCKING
	48	WOOD SIDING
	49	
	50	EXPANSION JOINT COVER
	51	20 GA. G.I. EXPANSION JOINT COVER (PTD)
	52	16 GA. S.S. COUNTER
	53	14 GA. G.I. CHANNEL
	54	½" FIBER EXPANSION JOINT
	55	
	56	STEEL FRAME & ATTACHMENT PER. MFR. (PTD.)
	57	STEEL SILL PER. MFR.
	58	REDUCER STRIP
	59	STEEL TUBE PER STRUCTURAL
	60	3/8" RD. LAG SCREW (COUNTER SUNK)
	61	1" "F" REVEAL / MOULDING
	62	S.S. BACKSPLASH
	63	
	64	CARRIAGE BOLT & BRACKET PROVIDED PER MANUF.
	65	1/2" DIA. LAG SCREW W/ 1 ½" MIN. EMBED. @ 16" O.C.

LICENSED ARCHITECT JAMES M. SHIVERS C19098 RENEWAL 02/29/ STATE OF CALIFORNIA

DATE	REVISIONS
	1

P S W C GROUP
ARCHITECTS / PLANNERS
1867 BUSINESS CENTER DR., SUITE 3, SAN BERNARDINO, CA. 92408
909/890-2223 FAX. 909/890-2844

ROOSEVELT II
ELEMENTARY SCHOOL
SAN BERNARDINO CITY UNIFIED SCHOOL DISTRICT
1261 W. 16TH STREET, SAN BERNARDINO, CA.

OPENING SCHEDULE

JOB NO. PS60
DRAWN BY
DATE 5/7/2011

A-10.3

RE-BID #F09-02 ROOSEVELT II (HENRY) E.S. NEW CONSTRUCTION BID ISSUANCE SET 12/09/11